California ISO

Agenda
Reliability Assessment and Study Updates

Kaitlin McGee
Sr. Stakeholder Engagement and Policy Specialist

2022-2023 Transmission Planning Process Stakeholder Meeting
November 17, 2022

Reminders

- Stakeholder calls and meetings related to Transmission Planning are not recorded.
  - Given the expectation that documentation from these calls will be referred to in subsequent regulatory proceedings, we address written questions through written comments, and enable more informal dialogue at the call itself.
  - Minutes are not generated from these calls, however, written responses are provided to all submitted comments.
- To ask a question, press #2 on your telephone keypad. Please state your name and affiliation first.
- Calls are structured to stimulate an honest dialogue and engage different perspectives.
- Please keep comments friendly and respectful.

2022-2023 Transmission Planning Process Stakeholder Call – Agenda

Topic	Presenter
Overview	Binaya Shrestha
Update – 2021-2022 Transmission Plan extension for assessment of Idaho resources	Biju Gopi
Reliability <$50 Million Project Recommendation - North	Preethi Rondla
Reliability <$50 Million Project Recommendation - South	Frank Chen
MIC Expansion Requests	
Preliminary Policy Assessment Introduction - Preliminary Results of SCE and GLW areas - Preliminary Results for SDG&E area - Preliminary Results for PG&E area	Nebiyu Yimer - Meng Zhang, Amanda Wong & Nebiyu Yimer - Luba Kravchuk - Lindsey Thomas
Preliminary Results of Economic Analysis	Yi Zhang
Long-term Local Capacity Technical Study – Overview - Preliminary LCR Studies – North - Preliminary LCR Studies – South	Catalin Micsa - RTN Engineers - David Le, Anuj Hiray & Rene Romo
Preliminary Result of Special Study on Reduced Reliance on Aliso Canyon Gas Storage	David Le
Wrap-up	Kaitlin McGee

California ISO

Introduction and Overview
Preliminary Reliability Assessment Results

Binaya Shrestha
Manager, Regional Transmission - North

2022-2023 Transmission Planning Process Stakeholder Meeting
November 17, 2022

2022-2023 Transmission Planning Process

December 2021 | April 2022 | May 2023

Phase 1 – Develop detailed study plan

State and federal policy

CEC - Demand forecasts

CPUC - Resource forecasts and common assumptions with procurement processes

Other issues or concerns

Phase 2 - Sequential technical studies

- Reliability analysis
- Renewable (policy-driven) analysis
- Economic analysis

Publish comprehensive transmission plan with recommended projects

Phase 3 Procurement

CAISO Board for approval of transmission plan

California ISO

2022-2023 Transmission Plan Milestones

- Draft Study Plan posted on February 18
- Stakeholder meeting on Draft Study Plan on February 28
- Final Study Plan posted on March 31
- Stakeholder meeting July 6
- Preliminary reliability study results posted and open Request Window on August 15
- Stakeholder meeting on September 27 and 28
  - Comments to be submitted by October 12
- Request window closes October 15
- Preliminary policy and economic study results on November 17
- Comments to be submitted by December 5
- Draft transmission plan to be posted on March 31, 2023
- Stakeholder meeting in April 2023
- Comments to be submitted within two weeks after stakeholder meeting
- Revised draft for approval at May Board of Governor meeting

Studies are coordinated as a part of the transmission planning process

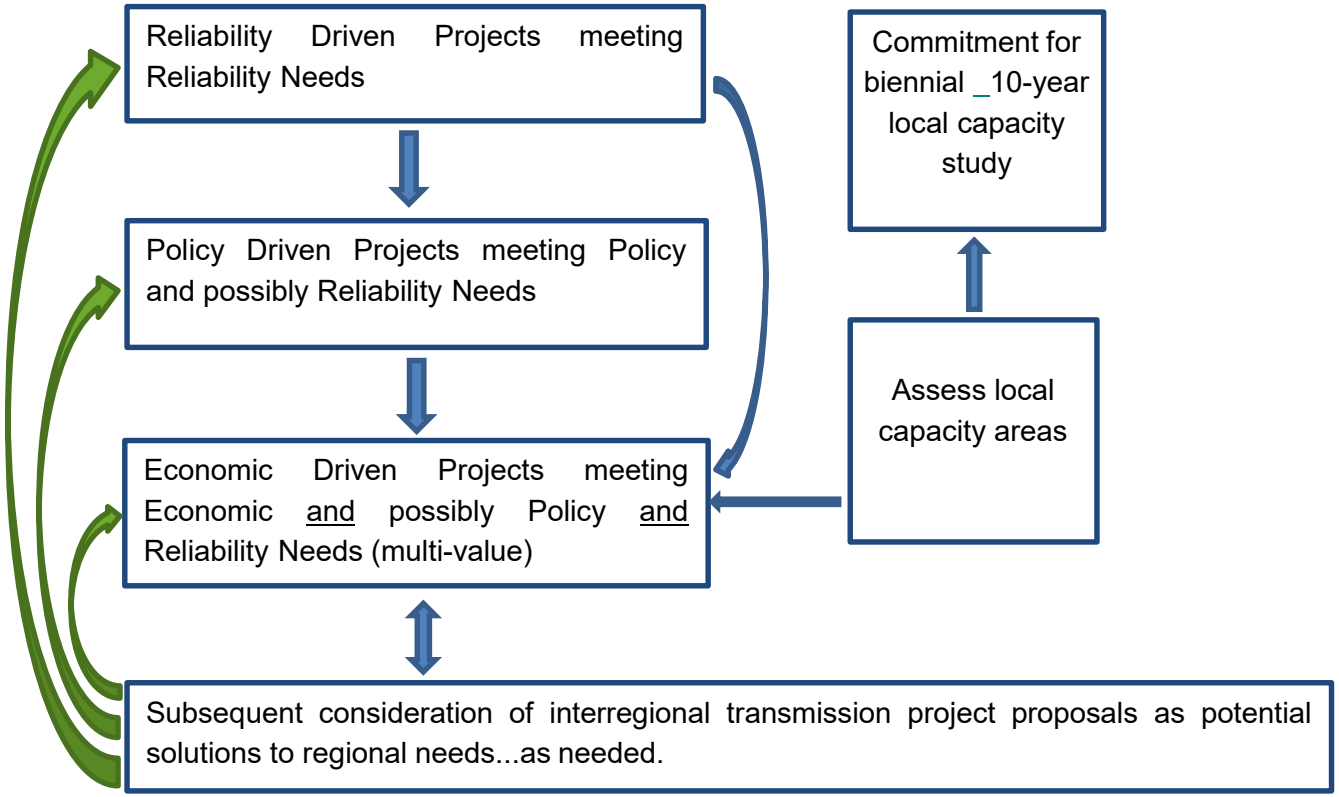

2022-2023 Transmission Planning Process Reliability Assessment - Update

- ISO recommended projects have two paths for approval:
  - For management approval, reliability projects less than $50 million can be presented at November stakeholder session
  - For Board of Governor approval of reliability projects over $50 million and projects not presented for management approval, are included in draft plan to be issued for stakeholder comments by March 31, 2023

2022 Request Window Submissions

Project Name	Submitter	Review of Submission
Cortina #1 60 kV Line Reconductoring	PG&E	May be considered for reliability alternative
Garberville Area Reinforcement	PG&E	May be considered for reliability alternative
Los Banos 70 kV Area Reinforcement	PG&E	May be considered for reliability alternative
Metcalf 230/115 kV Transformers CB Addition	PG&E	May be considered for reliability alternative
North East Kern 115 kV Line Reconductoring	PG&E	May be considered for reliability alternative
Redwood City 115 kV System Reinforcement	PG&E	May be considered for reliability alternative
South Bay Area Limiting Element Upgrade	PG&E	May be considered for reliability alternative
Tesla 115 kV Bus Reconfiguration	PG&E	May be considered for reliability alternative
GLW Upgrade 500 kV Conversion	GLW	Does not meet a reliability need identified by the CAISO in this TPP cycle.
BES Project Proposal	SDGE	May be considered for reliability alternative
Melrose Tap - TL680 Reconductor	SDGE	Does not meet a reliability need identified by the CAISO in this TPP cycle.
TL23013 and TL6959 Rearrange	SDGE	Does not meet a reliability need identified by the CAISO in this TPP cycle.
SG AND OT Redundant Bus Differential Relay	SDGE	May be considered for reliability alternative

2022 Request Window Submissions

Project Name	Submitter	Review of Submission
Barre 230 kV Switchrack Conversion to Breaker-and-a-Half	SCE	May be considered for reliability alternative
Mira Loma 500 kV CB Upgrade	SCE	May be considered for reliability alternative
New Serrano 4AA 500/230 kV Bank and 230 kV GIS Rebuild	SCE	May be considered for reliability alternative
New Colorado River 3AA 500/230 kV Bank	SCE	Does not meet a reliability need identified by the CAISO in this TPP cycle.
New Lugo 3AA 500/230 kV Bank	SCE	May be considered for reliability alternative
Lugo-Victor 230 kV Lines Reconductor	SCE	May be considered for reliability alternative
New Coolwater A 115/230 kV Bank	SCE	May be considered for reliability alternative
New Control 115 kV Shunt Reactor	SCE	May be considered for reliability alternative
Pacific Transmission Expansion Project (PTEP)	California Western Grid Development, LLC	A transparent GE PSLF dynamic model was not provided. May be considered as a long-term policy and economic alternative
San Diego Reinforcement Project	Nextera Energy	May be considered for reliability alternative
Lone Tree–Cayetano–Newark Corridor Series Compensation	Smartwires	May be considered for reliability alternative

Comments

- Comments due by end of day December 5, 2022
- Submit comments through the ISO's commenting tool, using the template provided on the process webpage:
- https://stakeholdercenter.caiso.com/RecurringStakeholderProcesses/2022-2023-Transmission-planning-process

California ISO

Accessing out-of-state Idaho wind resources

Biju Gopi
Sr. Manager, Transmission Interface Coordination

2022-2023 Transmission Planning Process Stakeholder Meeting
November 17, 2022

Scope of Presentation

- Background and context
- ISO activities to-date
- Review of August RFI responses
- Next Steps

Out-of-state (OOS) Wind Resources from Idaho

- Out-of-state wind resources from Idaho, Wyoming, and New Mexico are included in the portfolios provided by the CPUC for the ISO's transmission planning process (TPP)
- Specific to Idaho resources included in CPUC portfolios:
  - 2021-2022 TPP: included 1,062 MW of OOS wind from either Wyoming or Idaho in the base case
    - Primary focus was for transmission needs within CAISO system
  - 2022-2023 TPP: included 1,062 MW of OOS wind from Idaho/Wyoming in base case and 1,000 MW from Idaho and 1,500 MW from Wyoming in the sensitivity case
  - 2023-2024 TPP (draft): included 1,000 MW of OOS wind from Idaho in ***both*** the draft for the base and sensitivity cases

The SWIP-North project is the only current proposal providing direct access to the Idaho resources*:

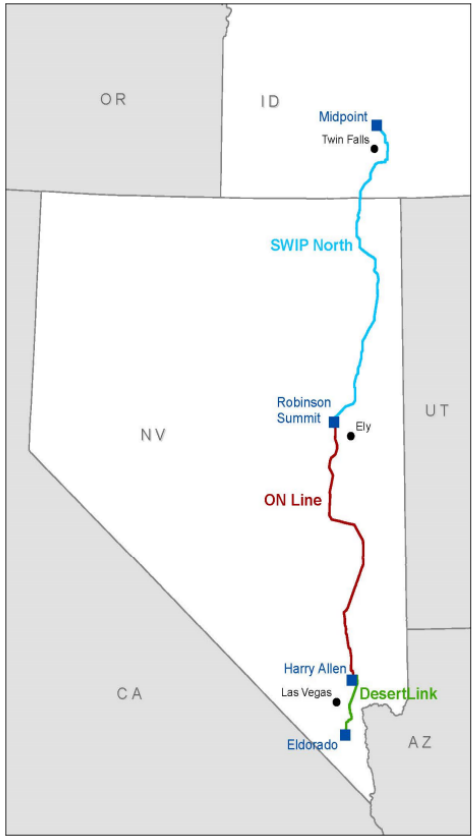

Phase I - ON Line (Robinson to Harry Allen) – Operating

- 231-mile 500 kV t-line from Ely to Las Vegas (plus 8 miles of 345 kV)
- Placed into service in January 2014
- ~2300 MW transfer capacity (~1200 MW reserved by NVE)
- Built as joint development project by LS Power and NVE
- First connection between Nevada Power Company and Sierra Pacific Power Company

Phase II - DesertLink (Harry Allen to Eldorado) – Operating

- 60-mile 500 kV t-line in Clark County
- Placed into service in August 2020
- ~3500 MW transfer capability controlled by CAISO
- LS Power selected by CAISO via competitive solicitation pursuant to FERC Order 1000
- Robust cost containment package including caps on construction costs, capital structure and ROE
- Extended the CAISO boundary from Eldorado to Harry Allen
- Increased capacity on NVE's Centennial Path

Phase III - SWIP North (Midpoint to Robinson) – Permitted

- 285-mile 500 kV t-line from Ely to Twin Falls under development
- ~2100 MW transfer capacity (~1000 MW reserved by NVE)
- When completed, LS Power entitled to ~1100 MW from Midpoint to Harry Allen
- Links NVE and CAISO to PacifiCorp and Idaho Power
- Nearly construction ready and planned to be online by the end of 2025
- Being considered for approval and cost recovery by CAISO in extended 2021-22 TPP

Microsoft PowerPoint - LS Power Grid - Apr 2022.pptx (nv.gov)

California ISO

The ISO expects to apply its competitive solicitation process to any capacity requirement ultimately found to be needed.

The proposed SWIP-North project is governed by an agreement* between NV Energy and LS Power

- LS Power responsible for all upgrade costs (Midpoint-Robinson Summit transmission, Robinson Summit phase shifters, series compensation on One Nevada Line (ON Line)
- NV Energy will have operational control of SWIP-North, and the CAISO would have access to the offered capacity through entitlements (no operational control)
- Generation resources in Idaho would be pseudo-tied to the ISO and would not be part of the ISO footprint or Balancing Authority Area ("BAA")
- Access to Idaho resources by California LSEs through SWIP-North, will be based on the ISO's existing maximum import capability ("MIC") construct, requirements, and allocation process

*Transmission use and capacity exchange agreement (TUA)

Current study status:

- Economic study of SWIP-North undertaken in the 2021-2022 TPP based on request from LS Power

- Additional consultation with stakeholders as an extension of the 2021-2022 TPP process
  - Issues paper published on June 20th
  - Stakeholder engagement call on June 27th
  - Release of request for expressions of interest (REOI) on August 25th with submission deadline of September 21st

Summary of Responses to RFI issued in August 2022

- Total of 16 responses received
  - Responses from multiple CCAs, one IOU, one municipality, and one direct connection load
  - About 1200 MW of non-binding interest with parties wishing to procure long-term PPAs (about 800 MW have exclusivity agreements, letter of intent or term sheets)
  - Supportive Comments:
    - offers value, helps meet renewable targets, higher capacity factors/ELCC, permitting issues with building in-state wind resources
  - Comments expressing concerns:
    - uncertainty of project, cost of integration (including internal upgrades), availability of import capability at El Dorado

Next steps regarding accessing Idaho resources

- Need to take into account evolving CPUC portfolios for out of state resources and concerns expressed by stakeholders
- Close off the stakeholder engagement within the 2021-2022 TPP extension related Idaho wind resources
- Assess the out of state resource requirements – including Idaho – and related transmission needs in the 2022-2023 TPP as well as in the 2023-2024 TPP.

California ISO

2022-2023 Transmission Planning Process PG&E Area Less than $50 Million Project Approvals and Project for Concurrence

Preethi Rondla
Sr. Engineer, Regional Transmission - North

2022-2023 Transmission Planning Process Stakeholder Meeting
November 17, 2022

Banta Ring Bus Project (Central Valley Area)

- Reliability Assessment Need
  - NERC Category P1 starting 2024.
- Project Submitter
  - CAISO
- Project Scope
  - Expand the yard at Banta Substation. Bring 3-115kV lines into the substation.
  - Install 4-CB 115kV RB (6-CB design)
  - Install a 115/12kV 60 MVA bank with 12kV switchgear and move Banta 1101, 1102, 1103 feeders to new switchgear.
  - Remove 60kV line & CB; remove Bk 1 & existing 12kV bus, regulator and CBs.
- Project Cost
  - $9M - $17.5M (Transmission cost)
- Alternatives Considered
  - Reconductoring 4 miles of Vierra-Tracy-Kasson 115 kV Line – doesn't facilitate future load interconnection in the area.
- Estimated In-service Date
  - 2024
- Recommendation
  - Approval

Existing

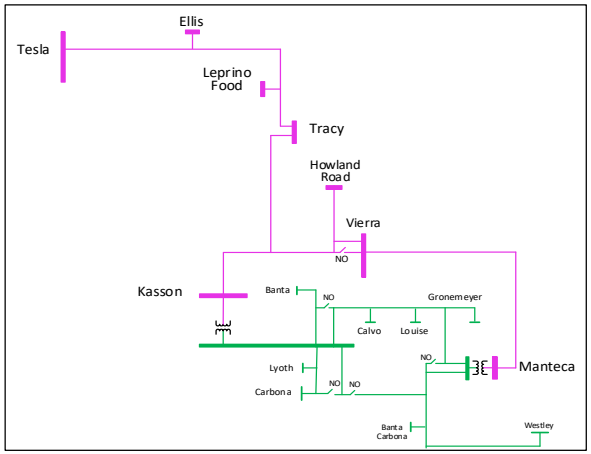

Proposed

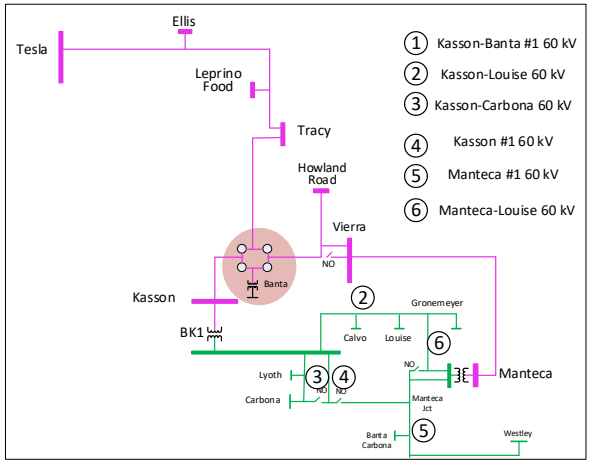

Metcalf 230/115 kV Transformers Circuit Breaker Addition Project (Greater Bay Area)

- Reliability Assessment Need
  - NERC Category P2 and P6 starting 2024.
- Project Submitter
  - PG&E
- Project Scope
  - Add parallel breakers to each of the 230/115 kV banks Nos. 1, 2, and 3 at Metcalf 230 kV Substation.
- Project Cost
  - $7.5M - $15M
- Alternatives Considered
  - Add two sectionalizing breakers at Metcalf 230 kV – space limitation
  - Convert Metcalf 230 kV to Breaker and Half Configuration – higher cost
- Estimated In-service Date
  - 2026
- Recommendation
  - Approval

Existing

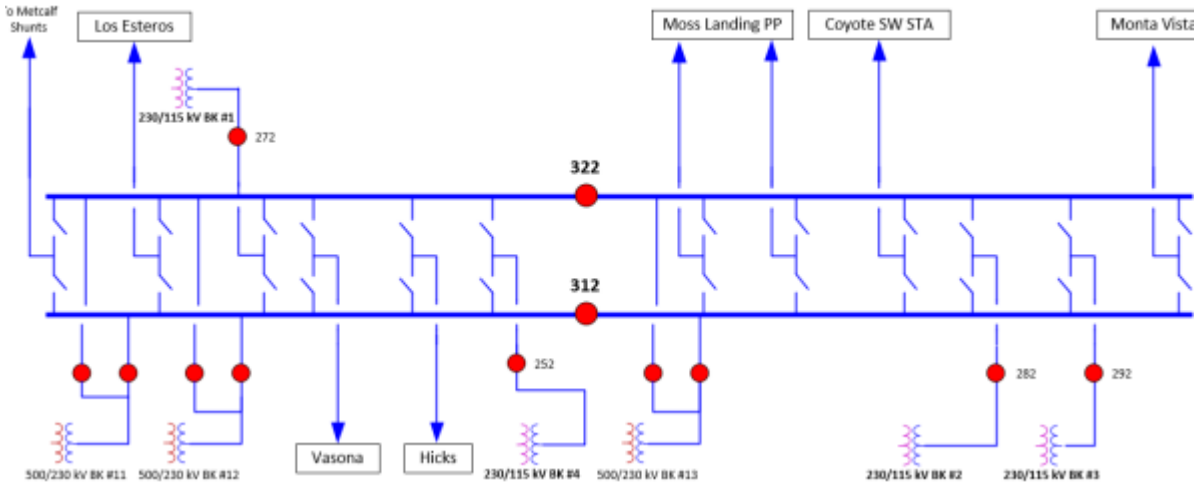

Proposed

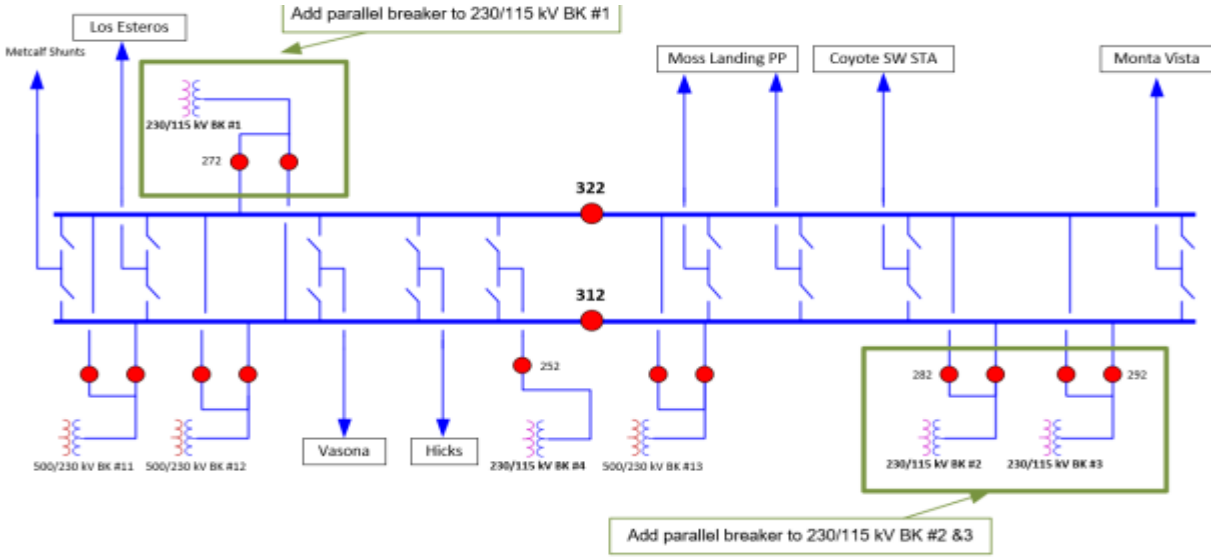

California ISO

South Bay Area Limiting Elements Upgrade Project (Greater Bay Area)

- Reliability Assessment Need
  - NERC Categories P1, P6 and P7 starting 2024.
- Project Submitter
  - PG&E
- Project Scope
  - Monta Vista –Wolfe 115 kV Line (1)
  - Newark –Jarvis #1 115 kV Line (2)
  - Metcalf-Piercy 115kV Line (3)
  - Metcalf-El Patio#1 115kV Line (4)
  - Los Esteros-Montague 115kV Line (5)
- Project Cost
  - $5.5M - $11M
- Alternatives Considered
  - Status quo- not recommended due to potential criteria violations.
- Estimated In-service Date
  - 2027
- Recommendation
  - Approval

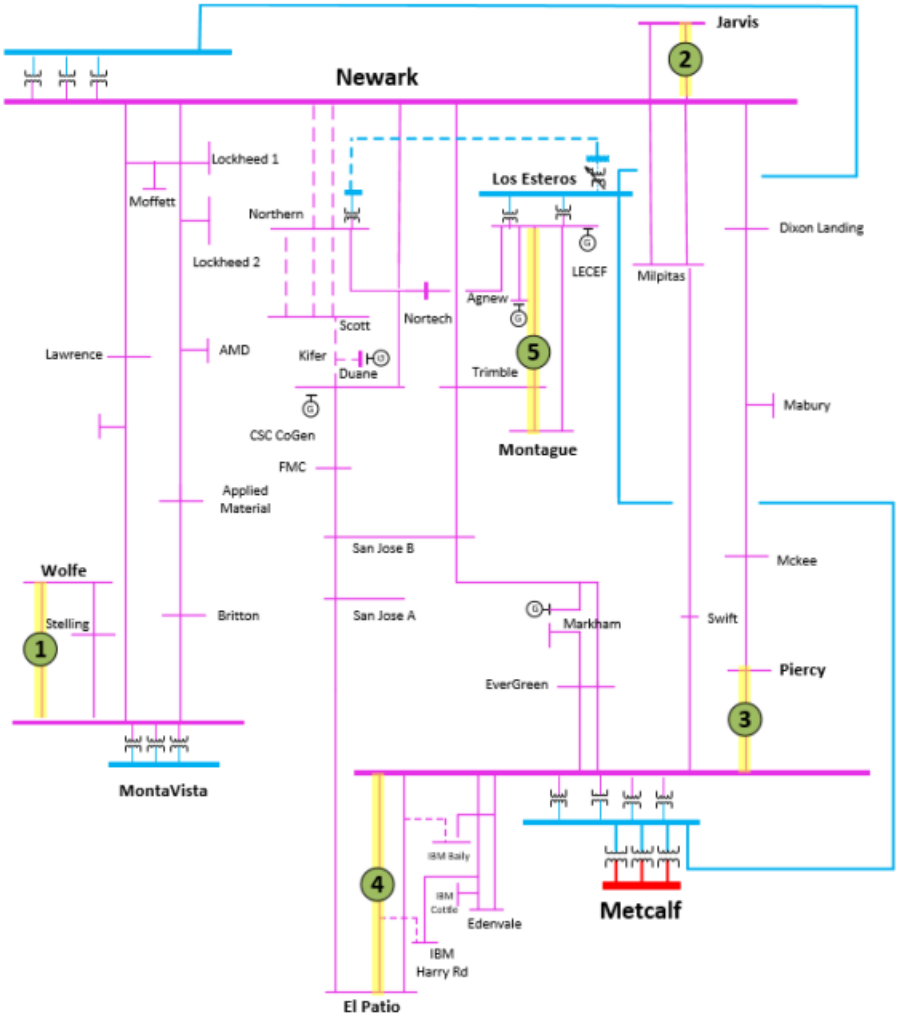

Bellota-Warnerville 230 kV reconductor - Equipment upgrade at CCSF owned Warnerville 230kV Substation (Fresno)

- Background
  - Bellota-Warnerville 230kV reconductoring Project was Approved in the 2012-2013 TPP cycle as a Policy Project.
  - In the 2021-2022 TPP cycle updated information was shared with CAISO that neighboring system equipment upgrades (owned by CCSF) at Warnerville 230kV Substation, are triggered by this CAISO previously approved reconductoring project
  - The CAISO voluntarily agrees to bear the cost of the limiting equipment upgrades on the CCSF system – funded through participating transmission owner
  - The ISO's tariff calls for stakeholders to be informed and provided an opportunity to provide comments (section 24.10)
  - This presentation is to inform stakeholders of the scope and cost of upgrading the limiting equipment at Warnerville.
- Project Scope
  - Reconductor Bellota-Warnerville 230kV Line (Previously Approved Policy Project) and upgrade limiting equipment at Warnerville 230kV-Install new jumpers, switches and new relays at the Warnerville 230kV Sub
- Estimated Project Cost
  - $100-$150M-Line Reconductoring (Previously Approved)
  - $1.6M equipment upgrade at Warnerville
- Estimated In-service Date
  - 2024
- Recommendation
  - Approval

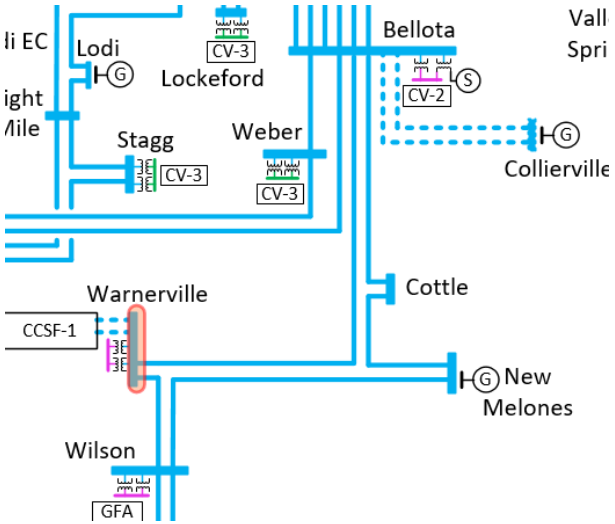

California ISO

2022-2023 Transmission Planning Process SCE Area Less than $50 Million Projects Recommended for Approvals and Project for Concurrence

Frank Chen
Lead Engineer, Regional Transmission - South

2022-2023 Transmission Planning Process Stakeholder Meeting
November 17, 2022

Barre 230 kV Switchrack Conversion to BAAH Project

- Project Submitter : SCE
- Reliability Assessment Need
  - Short circuit duty (SCD) exceeds existing 63 kA breaker rating today
  - SCD is greater than 95% of capability without once-through-cooling (OTC) units and above 100% of capability with the extension of OTC units in the LA Basin
  - New generation in the area will be limited due to safety concerns
  - Temporary complex operating procedure to manage circuit breaker overstress reduces reliability through curtailment of generation or other remedial operator interventions
- Project Scope
  - Convert Barre 230 kV switchrack to breaker-and-a-half (BAAH) configuration by relocating the south bus and adding a third CB to four bay positions
  - Add sectionalizing CBs and split Barre 230 kV to lower SCD
  - Relocate 230 kV lines, towers, and other facilities within substation
- Project Cost: $45M
- Expected In-Service Date: 6/30/2026
- Impact of Proposed Project:
  - Lowers SCD within allowable limits and increases margin significantly
  - Enables new generation and transmission interconnections in the area
- Recommendation: Approval

Barre 230 kV Switchrack Conversion to BAAH Project

One-Line Diagram

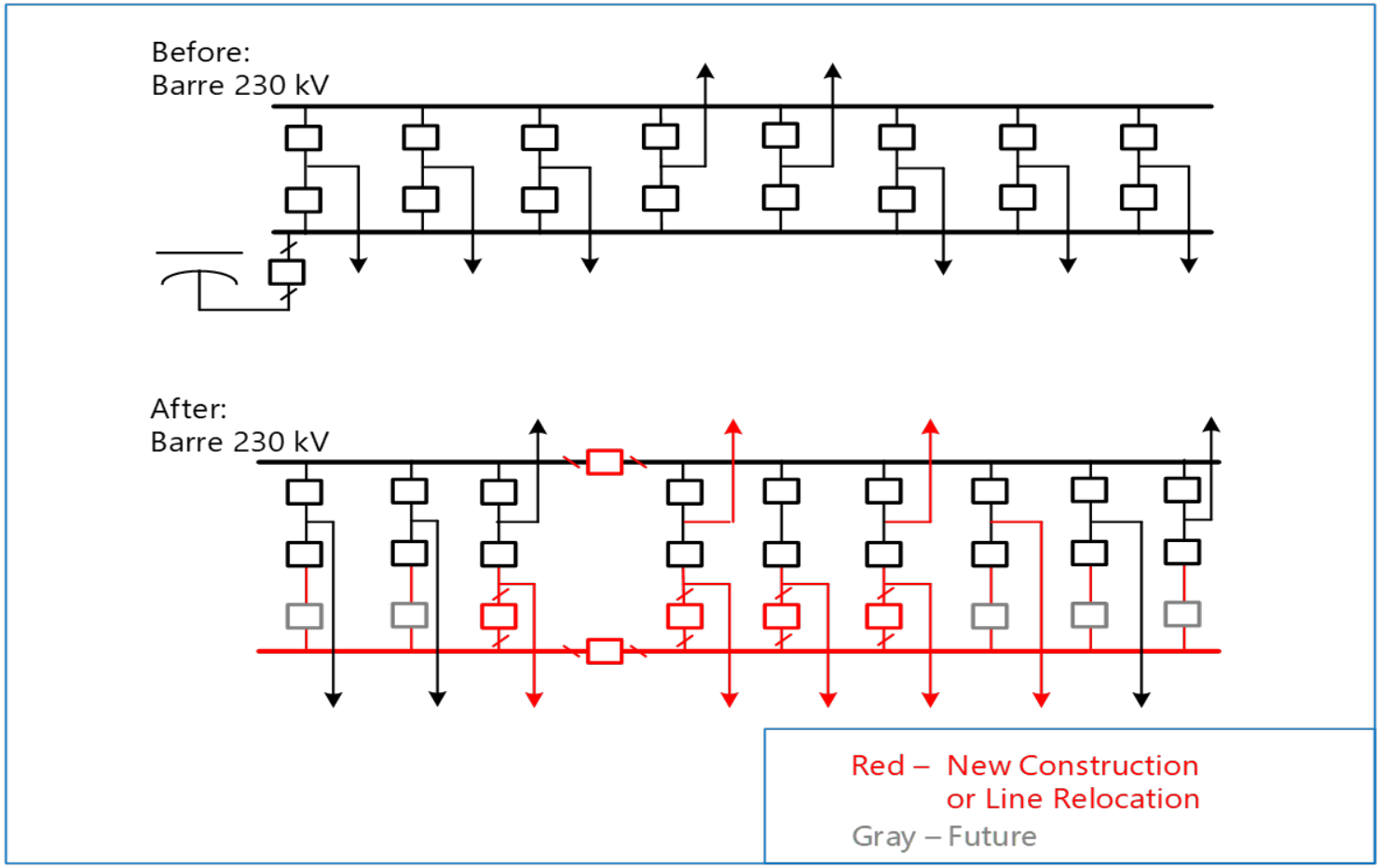

Diagram source: SCE 2021-2022 TPP RW submission

Mira Loma 500 kV CB Upgrade Project

- Project Submitter : SCE
- Reliability Assessment Need
  - Four (4) 500 kV CBs at Mira Loma Substation exceed 95% of short circuit duty (SCD) capability in the 2024 case and the 2032 case without OTC units in LA Basin
  - SCD exceeds 100% of the 50 kA capability in the 2032 case with the extension of OTC units
  - SCD could exceed 100% with anticipated new generation interconnection
- Project Scope
  - • Replace four (4) 50 kA CBs at Mira Loma 500 kV with new 63 kA rated CBs
- Project Cost:
  - $10M
- Expected In-Service Date:
  - 12/31/2026
- Impact of Proposed Project:
  - Lowers SCD within allowable limits and increases margin significantly
  - Enables new generation and transmission interconnections in the area

- Recommendation: Approval

California ISO

2022 MIC Expansion Requests

Catalin Micsa
Senior Advisor, Transmission Infrastructure Planning

2022-2023 Transmission Planning Process Stakeholder Meeting
November 17, 2022

Valid MIC expansion requests

No.	Requestor Name	Intertie Name (Scheduling Point)	MW quantity	Resource type
1-4	San Diego Community Power	IID-SCE_ITC (MIR2)	150	Hybrid (Solar Battery)
		ELDORADO_ITC (WILLOWBEACH)	333	Wind
5-7	Valley Electric Association	MEAD_ITC (MEAD 230)	33	Hydro
8			90	Solar
9-10	Sonoma Clean Power	GONDIPPDC_ITC (GONIPP)	68	Geothermal
		MERCHANT_BG (ELDORADO230)	40	
		IID-SDGE_BG (IVLY2)	50	
		SILVERPK_BG (SILVERPEAK55)	13	
11	East Bay Community Energy	SUMMIT_ITC (SUMMIT120)	40	Geothermal
		SILVERPK_BG (SILVERPEAK55)		
12	Peninsula Clean Energy	IID-SCE_ITC (MIR2)	26	Geothermal
13	Southwestern Power Group II, LLC	PALOVRDE_ITC (PVWEST)	1257	Wind

Not all MIC expansion requests trigger an actual need for expansion

- First the CAISO checks is these resources were included in the base portfolio in order to avoid duplicate entries.
- Second the CAISO calculates if a MIC expansion is needed (see methodology in RR BPM section 6.1.3.5).
- If MIC expansion is needed, the increase in MIC needs to be modeled and tested through deliverability studies
  - NQC deliverability study (if applicable in year one)
  - TPP deliverability study
  - GIP deliverability study
- One or multiple of these studies can limit the deliverability and therefore the MIC expansion.

Assessment of valid MIC expansion requests

No.	Requestor Name	Intertie Name (Scheduling Point)	MW quantity	Triggers expansion	Comments:
1-4	San Diego Community Power	IID-SCE_ITC (MIR2)	150	No	CPUC portfolio triggers MIC expansion.
		ELDORADO_ITC (WILLOWBEACH)	333	In CPUC portfolio	CPUC portfolio triggers MIC expansion.
5-7	Valley Electric Association	MEAD_ITC (MEAD 230)	33	Potentially	Together with CPUC portfolio triggers MIC expansion
8			90		
9-10	Sonoma Clean Power	GONDIPPDC_ITC (GONIPP)	68	Yes	
		MERCHANT_BG (ELDORADO230)	40	In CPUC portfolio	CPUC portfolio triggers MIC expansion.
		IID-SDGE_BG (IVLY2)	50	No or in CPUC portfolio	CPUC portfolio triggers MIC expansion.
		SILVERPK_BG (SILVERPEAK55)	13	Yes	
11	East Bay Community Energy	SUMMIT_ITC (SUMMIT120)	40	Yes	
		SILVERPK_BG (SILVERPEAK55)		Yes	
12	Peninsula Clean Energy	IID-SCE_ITC (MIR2)	26	No	CPUC portfolio triggers MIC expansion.
13	Southwestern Power Group II, LLC	PALOVRDE_ITC (PVWEST)	1257	No	CPUC portfolio triggers MIC expansion.

NQC Deliverability Study (2023)

Intertie Name (Scheduling Point)	Status	Comments:
ELDORADO_ITC (WILLOWBEACH)	Pass	Temporary expansion included in 2023 MIC.
MEAD_ITC (MEAD 230)	Pass	Temporary expansion included in 2023 MIC.
IID-SCE_ITC (MIR2)	Failed	Due to delay in “S” line upgrade.
IID-SDGE_BG (IVLY2)	Failed	Due to delay in “S” line upgrade.

- Only applicable to MIC expansion request for RA year 2023.
- Permanent expansion depends on the TPP and GIP deliverability study results.

TPP Deliverability Study

Intertie Name (Scheduling Point)	Status	Comments:
ELDORADO_ITC (WILLOWBEACH)	Failed	Included in the CPUC portfolio. For potential increase see mitigation for Lugo-Victorville constraint.
MEAD_ITC (MEAD 230)	Failed	Included in the CPUC portfolio. For potential increase see mitigation for Lugo-Victorville constraint.
IID-SCE_ITC (MIR2)	Failed	Included in the CPUC portfolio. For potential increase see mitigation for SCE Eastern and San Diego areas as well as Lugo-Victorville constraint.
IID-SDGE_BG (IVLY2)	Failed	Included in the CPUC portfolio. For potential increase see mitigation for SCE Eastern and San Diego areas as well as Lugo-Victorville constraint.
MERCHANT_BG (ELDORADO230)	Failed	Included in the CPUC portfolio. For potential increase see mitigation for Lugo-Victorville constraint.
GONDIPPDC_ITC (GONIPP)	Failed	For potential partial increase see mitigation for Lugo-Victorville constraint.
SILVERPK_BG (SILVERPEAK55)	Failed	For potential partial increase – see upgrades under SCE North of Lugo area constraints.
SUMMIT_ITC (SUMMIT120)	Failed	For potential increase see Drum-Higgins constraint in PG&E Sierra area.

California ISO

Policy-driven Deliverability Assessment Preliminary Results

Nebiyu Yimer, Amanda Wong, Meng Zhang, Lyubov Kravchuk, Lindsey Thomas

2022-2023 Transmission Planning Process Stakeholder Meeting

November 17, 2022

Agenda

- **Recap of previous presentations**
- **Summary of portfolios studied**
- **Preliminary deliverability assessment results**
  - **SCE/DCRT/GLW/VEA Area**
  - **SDG&E Area**
  - **PG&E Area**
- **Next steps**

Agenda

- **Recap of previous presentations**
- Summary of portfolios studied
- Preliminary deliverability assessment results
  - SCE/DCRT/GLW/VEA Area
  - SDG&E Area
  - PG&E Area
- Next steps

Recap of previous presentations

- In February, the CAISO presented the study plan for the policy-driven assessment including scope, a recap of the deliverability assessment methodology and a description of the 2032 base portfolio to be studied

- In July, the CAISO presented updates to the study plan regarding the updated load forecast from the CEC and the 2035 sensitivity resource portfolio from the CPUC to be studied

- The CAISO also shared with stakeholders the state agencies recommendation to identify MIC expansion opportunities and transmission needs for long-lead time portfolio resources outside the CAISO BAA while preserving TPD allocated in the GIP Process

Recap of previous presentations – cont'd

- During the September stakeholder call the CAISO discussed resource modeling adjustments made in the studies in collaboration with the CPUC to account for PTO-identified additional in-development resources and TPD allocated resources
- Informed stakeholders that the updated 50% deliverability study dispatch assumption for energy storage for the SSN scenario was implemented in the studies
- Presented MIC expansion requests that were found to be valid and were included in the studies
- The main objective of today's call is to present the preliminary results of the study

Agenda

- Recap of previous presentations
- **Summary of portfolios studied**
- Preliminary deliverability assessment results
  - SCE/DCRT/GLW/VEA Area
  - SDG&E Area
  - PG&E Area
- Next steps

Resources portfolios studied

- The 2022-2023 TPP policy-driven study is based on a base portfolio and a sensitivity portfolio transmitted by the CPUC
- As the base portfolio, the CPUC transmitted a 2032 PSP portfolio based on the 38 MMT GHG target by 2030 and the 2020 IEPR demand forecast utilizing the high electric vehicle assumptions.
- The sensitivity portfolio is a 2035 resource portfolio based on the CEC's high electrification load forecast and a 30 MMT GHG target
- Age-based thermal generation retirement assumption to be used in the study was also provided

CPUC portfolio documentation for the 2022-2023 TPP

- Decision adopting the 2021 Preferred System Plan:
  https://docs.cpuc.ca.gov/PublishedDocs/Published/G000/M451/K412/451412947.PDF
- Modeling Assumptions for the 2022-2023 TPP
  https://docs.cpuc.ca.gov/PublishedDocs/Published/G000/M451/K485/451485713.PDF
- Final busbar mapping results for the base portfolio
  https://files.cpuc.ca.gov/energy/modeling/BusbarMapping_Dashboard_38MMT_V2022_02_08_v2.xlsx (particularly the 'FinalMapping_bySub' and '2_Tx_Calculator_R5' tabs)
- Baseline resource assumptions
  https://files.cpuc.ca.gov/energy/modeling/Baseline_Reconciliation_V2022_02_08.xlsx
- Thermal Age Based Retirements Assumptions
  https://files.cpuc.ca.gov/energy/modeling/Thermal%20Age%20Based%20Retirements%20Assumptions_V2021_10_15.xlsx

CPUC portfolio documentation – cont'd

- Final busbar mapping results for the sensitivity portfolio https://www.cpuc.ca.gov/-/media/cpuc-website/divisions/energy-division/documents/integrated-resource-plan-and-long-term-procurement-plan-irp-ltpp/2019-2020-irp-events-and-materials/busbarmapping_30_mmt_hesensitivity_dashboard_07_01_22.xlsx

- Resource additions and adjustments to the base portfolio to account for PTO identified in-development resources and TPD allocated resources in applicable areas https://files.cpuc.ca.gov/energy/modeling/BaseCase_updated_in-dev_andTPD_9-21-22.xlsx

- Resource adjustments to the sensitivity portfolio to account for PTO identified in-development resources and TPD allocated resources in applicable areas https://files.cpuc.ca.gov/energy/modeling/BusbarMapping_30MMT_HESens_Dashboard_08_22_22_TPD_v2.xlsx

Total and FC generic resource mix in the two portfolios

Total (FC+EO) generic resource additions (MW)		
	Base	Sensitivity
Solar	11,271	33,640
Wind	5,778	12,301
LDES	1,000	2,000
Geothermal	1,119	1,746
Battery Storage	7,299	20,673
Bio	129	129
Total (FC+EO)	**26,597**	**70,489**

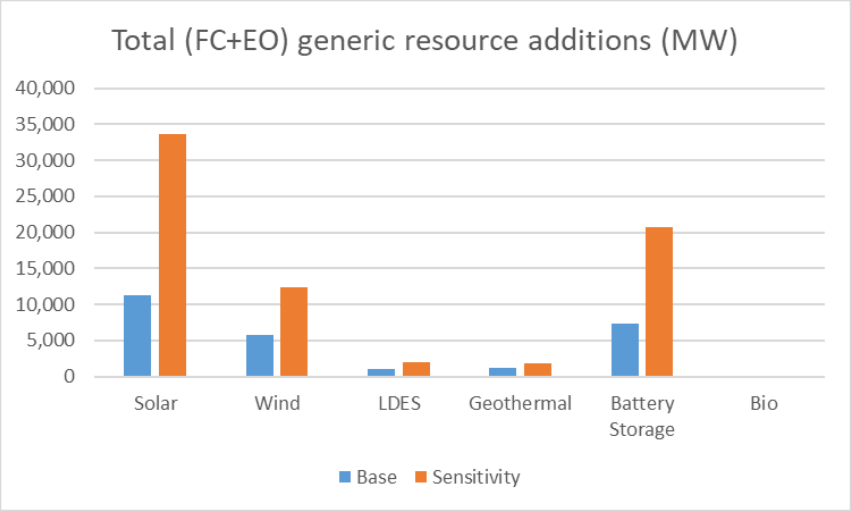

FC generic resource additions (MW)		
	Base	Sensitivity
Solar	2,057	8,138
Wind	5,159	11,635
LDES	1,000	2,000
Geothermal	1,119	1,746
Battery Storage	7,299	22,673
Bio	129	129
Total FC	**16,763**	**46,321**

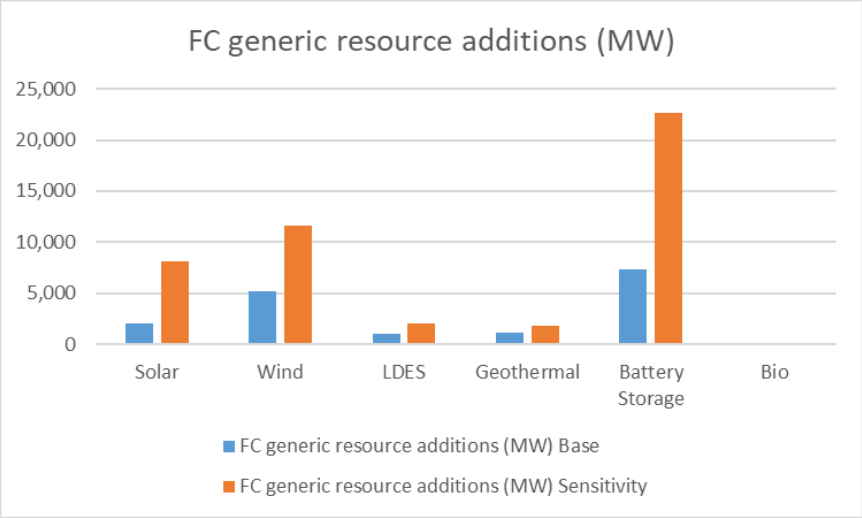

Agenda

- Recap of previous presentations
- Summary of portfolios studied
- **Preliminary deliverability assessment results**
  - **SCE/DCRT/GLW/VEA Area**
  - **SDG&E Area**
  - **PG&E Area**
- Next steps

Preliminary results for SCE/GLW/VEA/DCRT Area

Portfolio resources expected to impact SCE/GLW/VEA/DCRT area

RESOLVE Resource Name	Resource Type	FCDS			Total (FCDS+EO)		
		Base	Sensitivity	Change	Base	Sensitivity	Change
Arizona_Li_Battery	Li_Battery	759	1,798	1,039	759	1,798	1,039
Arizona_Solar	Solar	600	634	34	1,881	3,226	1,345
Distributed Solar	Solar	7	7	-	7	7	-
Greater_Imperial_Geothermal	Geothermal	600	900	300	600	900	300
Greater_Kramer_Li_Battery	Li_Battery	400	1,132	732	400	1,132	732
Greater_Kramer_Solar	Solar	57	623	566	772	2,032	1,260
Greater_LA_Li_Battery	Li_Battery	2,390	3,511	1,121	2,390	3,511	1,121
Greater_LA_Solar	Solar	-	125	125	1,502	2,053	551
InState Biomass	Biomass/Biogas	14	14	-	14	14	-
Northern_Nevada_Geothermal	Geothermal	-	287	287	-	287	287
Riverside_East_Pumped_Storage	LDES	-	700	700	-	700	700
Riverside_Li_Battery	Li_Battery	-	1,538	1,538	-	1,538	1,538
Riverside_Solar	Solar	-	608	608	-	2,999	2,999
Southern_Nevada_Geothermal	Geothermal	440	440	-	440	440	-
Southern_Nevada_Wind	Wind	442	442	-	442	442	-
Southern_NV_Eldorado_Li_Battery	Li_Battery	863	2,271	1,408	863	2,271	1,408
Southern_NV_Eldorado_Solar	Solar	736	1,198	462	2,342	5,007	2,665
Tehachapi_LDES	LDES	500	500	-	500	500	-
Tehachapi_Li_Battery	Li_Battery	822	1,598	776	822	1,598	776
Tehachapi_Solar	Solar	302	1,731	1,429	2,535	5,702	3,167
Tehachapi_Wind	Wind	93	93	-	93	93	-
North_Victor_Wind	Wind	-	100	100	-	100	100
SW_Ext_Tx_Wind	OOS Wind, Ext Tx	5	5	-	5	5	-
New_Mexico_Wind	OOS Wind, New Tx	438	2,328	1,890	438	2,328	1,890
Wyoming_Wind/Idaho_Wind	OOS Wind, New Tx	1,062	-	(1,062)	1,062	-	(1,062)
Wyoming_Wind	OOS Wind	-	1,500	1,500	-	1,500	1,500
Idaho_Wind	OOS Wind	-	1,000	1,000	-	1,000	1,000
	Total	**10,530**	**25,082**	**14,552**	**17,867**	**41,183**	**23,316**

SCE Metro Area

On-peak SCE Metro study area constraints

Overloaded Facility	Contingency	More Limiting Scenario	Loading (%)	
			Base	Sensitivity
Mesa–Lighthipe 230 kV	Mesa–Redondo & Mesa–Laguna Bell #1 (P7)	HSN	<100%	111%
	Mesa–Redondo & La Fresa–Laguna Bell 230 kV (P7)	HSN	<100%	106%
Mesa–Laguna Bell #2	Mesa–Redondo & Mesa–Laguna Bell #1 (P7)	SSN	<100%	107%
Hinson–La Fresa 230 kV	Mesa–Redondo & La Fresa–Laguna Bell 230 kV (P7)	SSN	<100%	109%
Chino–Mira Loma No. 3***	Chino–Mira Loma No. 1 & 2 (P7)	HSN	<100%	115%
Serrano 500/230 kV banks	Serrano 500/230 kV transformer (P1)	HSN	<100%	104%
Mesa 500/230 kV transformers 3 & 4	Mesa 500/230 kV transformers 3 or 4 (P1)	SSN	<100%	102%
Mesa–Mira Loma 500 kV UG Cable	Base Case	HSN	101%	111%
Barre–Lewis 230 kV***	Barre–Villa Park 230 kV (P1)	HSN	<100%	109%
	San Onofre–Santiago 230 kV N0. 1 & 2 (P7)	HSN	<100%	107%
Barre–Villa Park 230 kV***	Barre–Lewis 230 kV (P1)	HSN	<100%	107%
Serrano–Villa Park 230 kV No. 1***	Serrano–Villa Park 230 kV No. 2 (P1)	HSN	<100%	102%

*** Depending on the alternative considered for the SCE Eastern/SDG&E area the constraints become base portfolio constraints

Off-peak SCE Metro study area constraints

Overloaded Facility	Contingency	Loading (%)	
		Base	Sensitivity
Mesa–Lighthipe 230 kV	Mesa–Redondo & Mesa–Laguna Bell #1 (P7)	<100%	101%

SCE Metro study area deliverability constraints

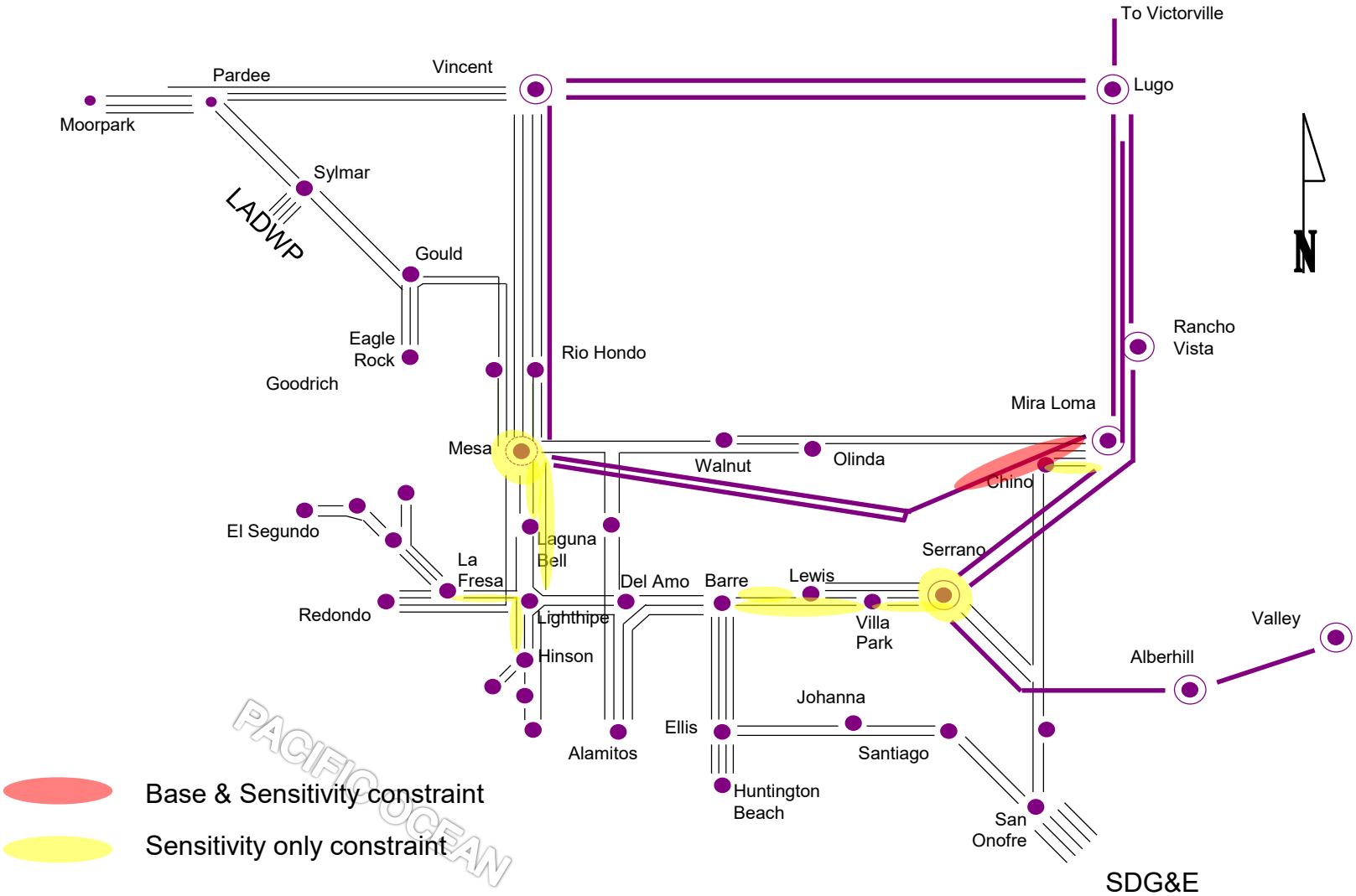

SCE Metro study area mitigation alternatives

Alternative	Description	Cost $M	Base***	Sensitivity
Common to both alternatives	• Add a third cable to UG segment of Mesa–Mira Loma 500 kV line (also identified in the SCE Eastern área assessment) – 124%/124% normal/emergency rating increase	35	√	√
	• Terminal upgrades to increase the rating of Hinson–La Fresa 230 kV line to 124%/151% of its current normal/emergency rating	10	TBD	√
	• Terminal upgrades to increase the rating of Chino-Mira Loma 230 kV line to 130%/172% of its current normal/emergency rating	15	TBD	√
	• Create a new Mesa-Serrano 500 kV by extending to Serrano the existing box-looped segment of the Mesa–Mira Loma 500 kV line	300	TBD	√
	Total	**360**		
Alt 1	• Build 500 kV facilities at Del Amo Substation complete with three 500/230 banks; construct two 500 kV lines from Mesa to Del Amo Substation	500	TBD	√
	Grand total	**860**		
Alt 2	• Build 500 kV facilities at Del Amo Substation complete with three 500/230 banks; construct two 500 kV lines to loop the new Mesa–Serrano 500 kV line into Del Amo Substation	450	TBD	√
	Grand total	**810**		

*** Depending on the preferred transmission alternative for the SCE Eastern/SDG&E area, some of the upgrades identified here for the sensitivity portfolio may be needed for the base portfolio.

Alternative 1

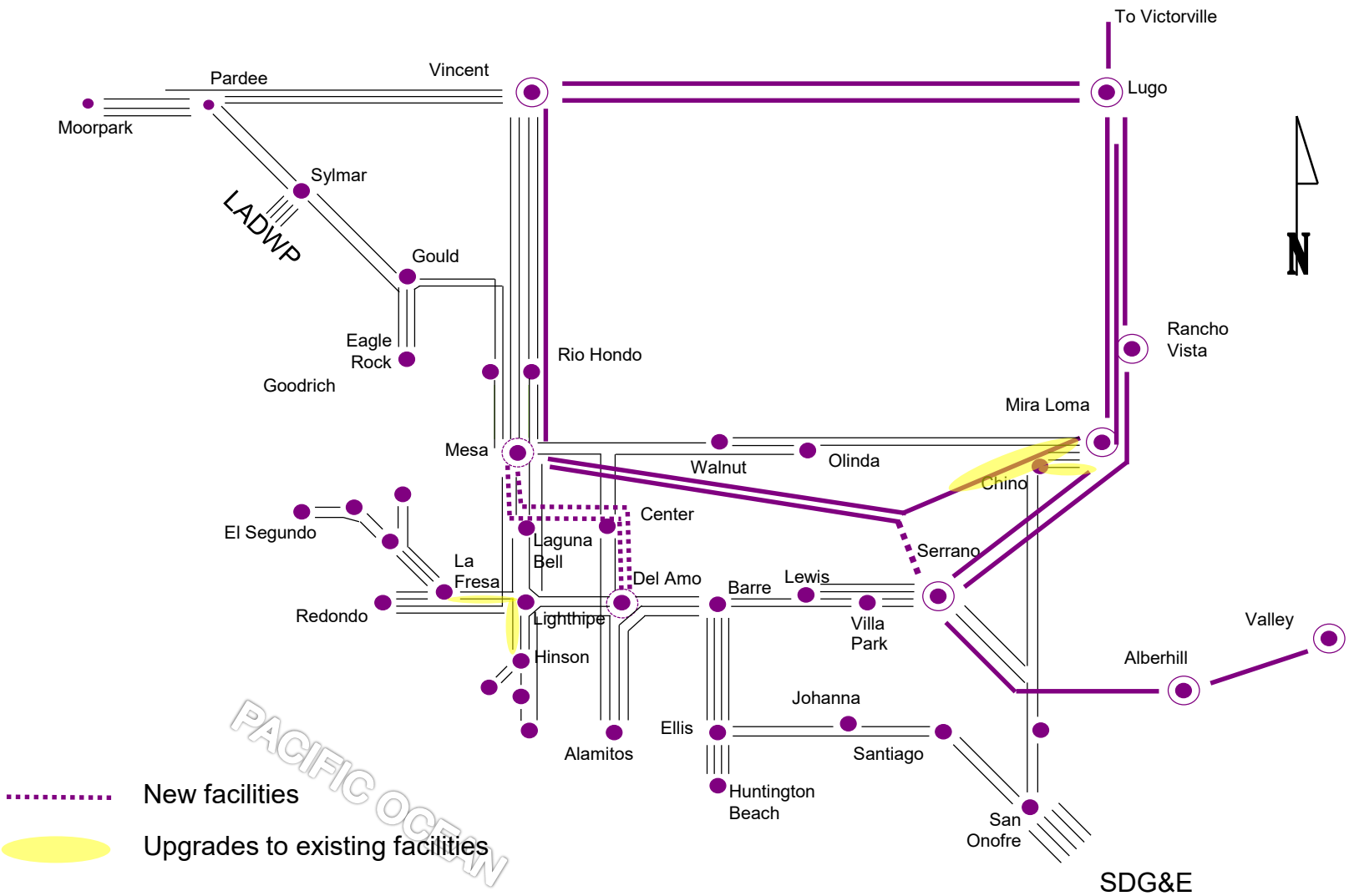

Alternative 2

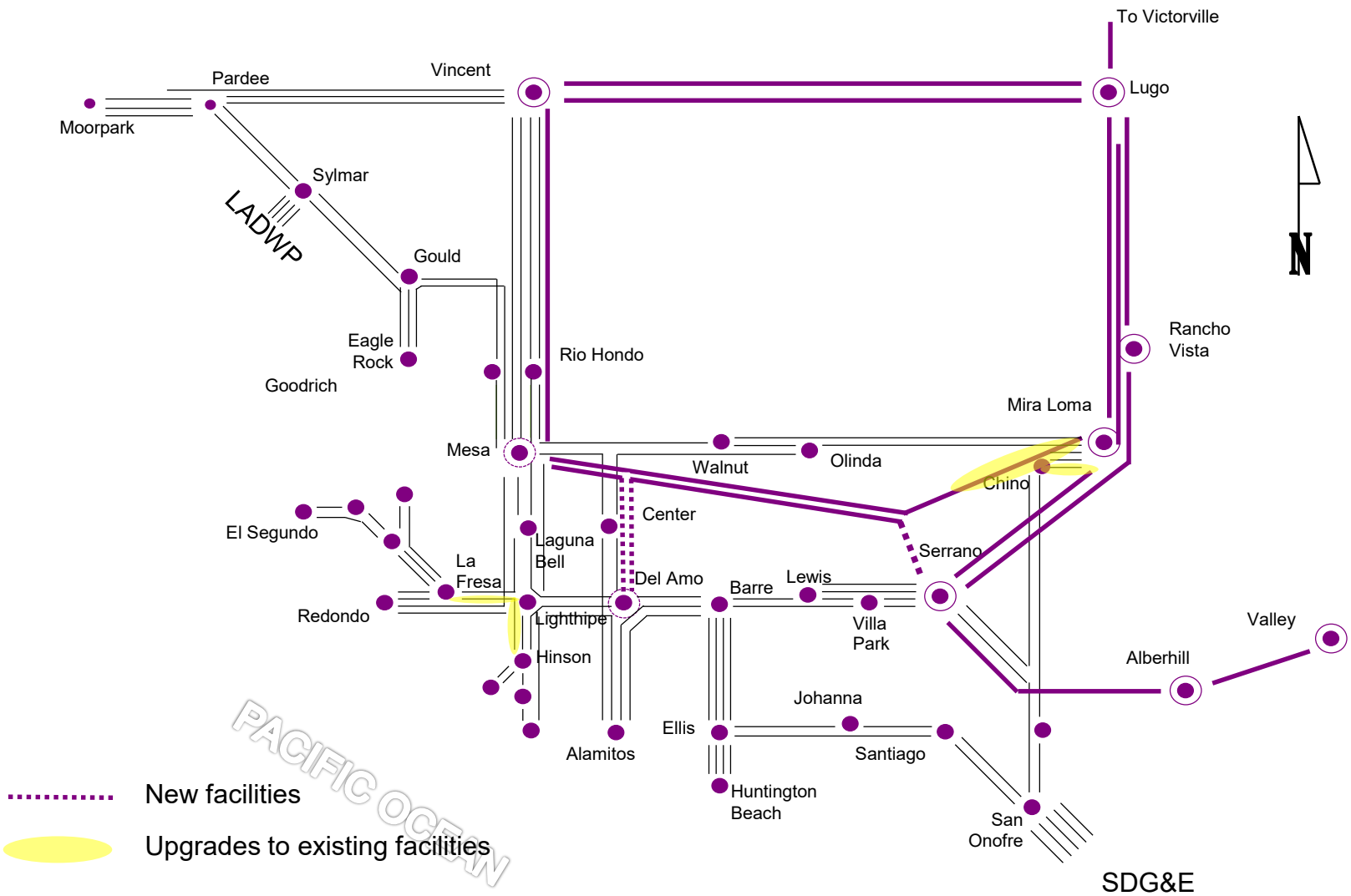

SCE Metro Area assessment summary

- The majority of the constraints identified in the Metro area are in the sensitivity portfolio with the exception of the Mesa–Mira Loma 500 kV line that was also identified in the base portfolio
- The constraints identified include the 230 kV lines into the Metro load area out of Mesa and Serrano 500 kV Substations
- Depending on the alternative considered for the SCE Eastern/SDG&E area, some of the mitigations identified for the sensitivity portfolio may be needed for the base portfolio.
- The preferred transmission development for the base and/or sensitivity portfolio will be identified after further evaluation and will be coordinated with the preferred development for SCE Eastern and SDG&E areas.

SCE North of Lugo Area

Generic portfolio resources expected to impact SCE NOL area assessment

RESOLVE Resource Name	Resource Type	FCDS			Total (FCDS+EO)		
		Base	Sensitivity	Change	Base	Sensitivity	Change
Distributed Solar	Solar	7	7	-	7	7	-
Greater_Kramer_Li_Battery	Li_Battery	400	1,132	732	400	1,132	732
Greater_Kramer_Solar	Solar	57	623	566	772	2,032	1,260
North_Victor_Wind	Wind	-	100	100	-	100	100
		464	**1,862**	**1,398**	**1,179**	**3,272**	**2,092**

- In addition to generic portfolio resources, a total of 862 MW of hybrid and non-hybrid in-development capacity resources and 1,063 MW of capacity plus energy resources are modeled in the NOL Area study
- The area heavily relies on increasingly complex RAS to ensure deliverability of these in-development resources and to protect reliability of the system
- Addition of portfolio resources without transmission upgrades will further increase the complexity of the RAS

On-peak SCE NOL study area deliverability constraints

Overloaded Facility	Contingency	More Limiting Scenario	Loading (%)	
			Base	Sensitivity
Lugo 500/230 Tr. 1 & 2	Lugo 500/230 Tr. No. 1 or 2 (P1)	HSN	125%	143%
Kramer–Victor 230 kV #1 & 2	Kramer–Victor 230 kV #1 or 2(P1)	HSN	110%	99%
Lugo–Victor 230 kV 1, 2, 3 & 4	Two Lugo–Victor 230 kV lines (P7)	HSN	113%	117%
Roadway–Victor 115 kV	Kramer–Victor 230 kV #1 &2 (P7)	HSN	Diverged (150%)	Diverged (147%)
Kramer–Victor 115 kV		HSN	Diverged (147%)	Diverged (160%)
Kramer–Roadway 115 kV		HSN	Diverged (143%)	Diverged (161%)
Kramer 230/115 Tr. 1 & 2		HSN	188%	195%
Calcite–Lugo 230 kV	Base case	HSN	95%	132%
	Pisgah–Lugo 230 kV (P1)	HSN	116%	171%
	Eldorado–Lugo 500 kV (P1)	HSN	105%	147%
	Lugo–Mohave 500 kV (P1)	HSN	102%	140%
Pisgah–Lugo 230 kV	Calcite–Lugo 230 kV (P1)	HSN	<100%	143%
	Pisgah–Calcite 230 kV (P1)	HSN	<100%	102%
Pisgah–Calcite 230 kV	Pisgah–Lugo 230 kV (P1)	HSN	<100%	103%
Control–Tap 189	Control–Inyokern 115 kV #2 (P1)	HSN	106%	<100
Silver Peak–Tap 642 55 kV	Control–Silver Peak C 55 kV (P1)	HSN	127%	132%
NEVBD501 58 kV to 55 kV	Control–Silver Peak A 55 kV (P1)	HSN	134%	142%
Silver peak PST (See Note)	Base case	HSN	318%	318%

- Note: The requested Silver Peak BG MIC expansion exceeds the rating of the non-ISO controlled Silver Peak PST. Further evaluations will be performed with the MIC expansion reduced to 17 MW

Off-peak SCE NOL study area deliverability constraints

Overloaded Facility	Contingency	Loading (%)	
		Base	Sensitivity
Lugo 500/230 Tr. 1 & 2	Base Case	<100%	108%
Lugo 500/230 Tr. 1 & 2	Lugo 500/230 Tr. No. 1 or 2 (P1)	115%	173%
Victor–Lugo 230 kV 1, 2, 3 & 4	Base Case	<100%	103%
	Victor–Lugo 230 kV 1&2 or 3 & 4	<100%	152%
Kramer–Victor 230 kV #1 & 2	Base Case	<100%	143%
Kramer–Victor 230 kV #1 & 2	Kramer–Victor 230 kV 1 or 2 (P1)	119%	185%
Roadway–Victor 115 kV	Kramer–Victor 230 kV #1 &2 (P7)	Diverged (191%)	Diverged (261%)
Kramer–Victor 115 kV		Diverged (176%)	Diverged (260%)
Kramer–Roadway 115 kV		Diverged (168%)	Diverged (251%)
Kramer 230/115 Tr. 1 & 2		Diverged (175%)	Diverged (256%)
Coolwater–Dunn Siding 115 kV		Diverged (105%)	Diverged (181%)
Dunn Siding–Baker 115 kV		Diverged (105%)	Diverged (181%)
Baker–Mountain Pass 115 kV		<100%	Diverged (164%)
Victor 230/115 kV Tr. 2, 3 &4		<100%	Diverged (126%)
Mountain Pass–Ivanpah 115 kV		<100%	Diverged (126%)
Coolwater–Kramer 230 kV	Sandlot–Kramer 230 kV (P1)	109%	109%
Sandlot–Kramer 230 kV	Coolwater–Kramer 230 kV (P1)	106%	106%
Calcite–Lugo 230 kV	Calcite–Pisgah 230 kV (P1)	109%	115%
	Pisgah–Lugo 230 kV (P1)	<100%	116%
	Pisgah–Eldorado 230 kV 1 or 2 (P1)	<100%	111%
Calcite–Pisgah 230 kV	Calcite–Lugo 230 kV (P1)	106%	117%
Roadway–Victor 115 kV	Base Case	<100%	113%
	Kramer–Victor 230 kV #1 or 2 (P1)	<100%	117&

On-peak SCE NOL study area deliverability constraints

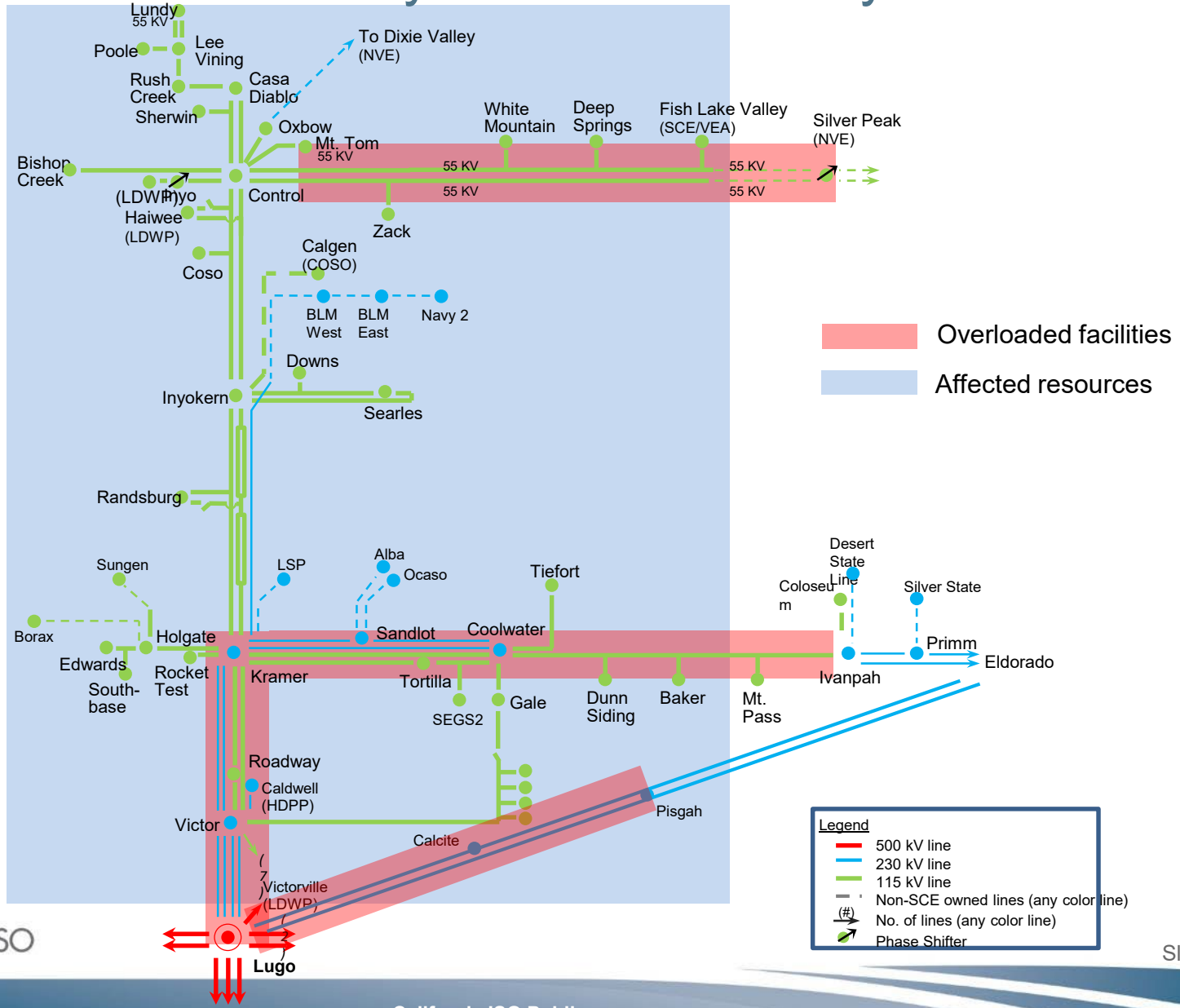

California ISO

Summary of SCE NOL results

- Further expanding the increasingly complex NOL Area RAS(s) to integrate portfolio resources will mitigate the on-peak constraints identified other than the Calcite–Lugo P0 overload in the sensitivity portfolio
  - Due to the interaction between the NOL and EOP areas, further evaluation of the mitigation for the Calcite–Lugo constraint will be coordinated between the two areas
- Similarly, expanded NOL Area RAS(s) or dispatching energy storage in charging mode address the off-peak constraints other than the impact of the Victor–Kramer 230 kV P7 contingency in the sensitivity case
- Transmission upgrades are needed to address the above constraints in the sensitivity portfolio

Summary or NOL results

- More comprehensive transmission upgrades will be considered for the base and sensitivity portfolios taking into account
  - High congestion costs both in the base and sensitivity portfolios due to multiple constraints (See the economic assessment presentation)
  - The increasing complexity of RAS in the area which cannot be accurately represented in the ISO market model

SCE NOL study area potential mitigation alternatives

Alternative	Description	Cost $M	Base	Sensitivity
1a	**230 kV transmission upgrade alternative** (Variation from Alternative 1b marked by "***")			
	• Rebuild Calcite–Lugo 230 kV line (See note below)	239	TBD	√
	• Reconductor Victor–Kramer 230 kV lines; loop in Kramer–Victor 115kV line into Roadway***	202	TBD	√
	• Add 3rd Lugo 500/230 kV Transformer	70	TBD	TBD
	• Reconductor Lugo–Victor 230 kV No. 1, 2, 3 & 4 lines	112	TBD	TBD
	Total	**623**		
1b	**230 kV transmission upgrade alternative** (Variation from Alternative 1a marked by "***")			
	• Rebuild Calcite–Lugo 230 kV line (See note below)	239	TBD	√
	• Rebuild/build Kramer–Victor 115 kV lines to 230 kV; Loop the old segment of Kramer–Victor 115 kV into Roadway***	TBD	TBD	√
	• Add 3rd Lugo 500/230 kV Transformer	70	TBD	TBD
	• Reconductor Lugo–Victor 230 kV No. 1, 2, 3 & 4 lines	112	TBD	TBD
	Total	**TBD**		
2	**500 kV transmission development alternative**			
	• Build a new 500 kV substation at Kramer along with a new 500 kV transmission line to Lugo or a new switching station on the Lugo–Vincent 500 kV line	818	TBD	√
	• Build a new 500 kV substation at Pisgah looping into either Eldorado/Mohave–Lugo 500 kV lines (See note below)	TBD	TBD	√
	Total	**TBD**		

- Note: The ISO will also explore the feasibility of looping Pisgah–Lugo line into Calcite and increasing the ratings of both Calcite–Lugo lines instead of the upgrades identified above

Alternative 1a vs. Alternative 1b

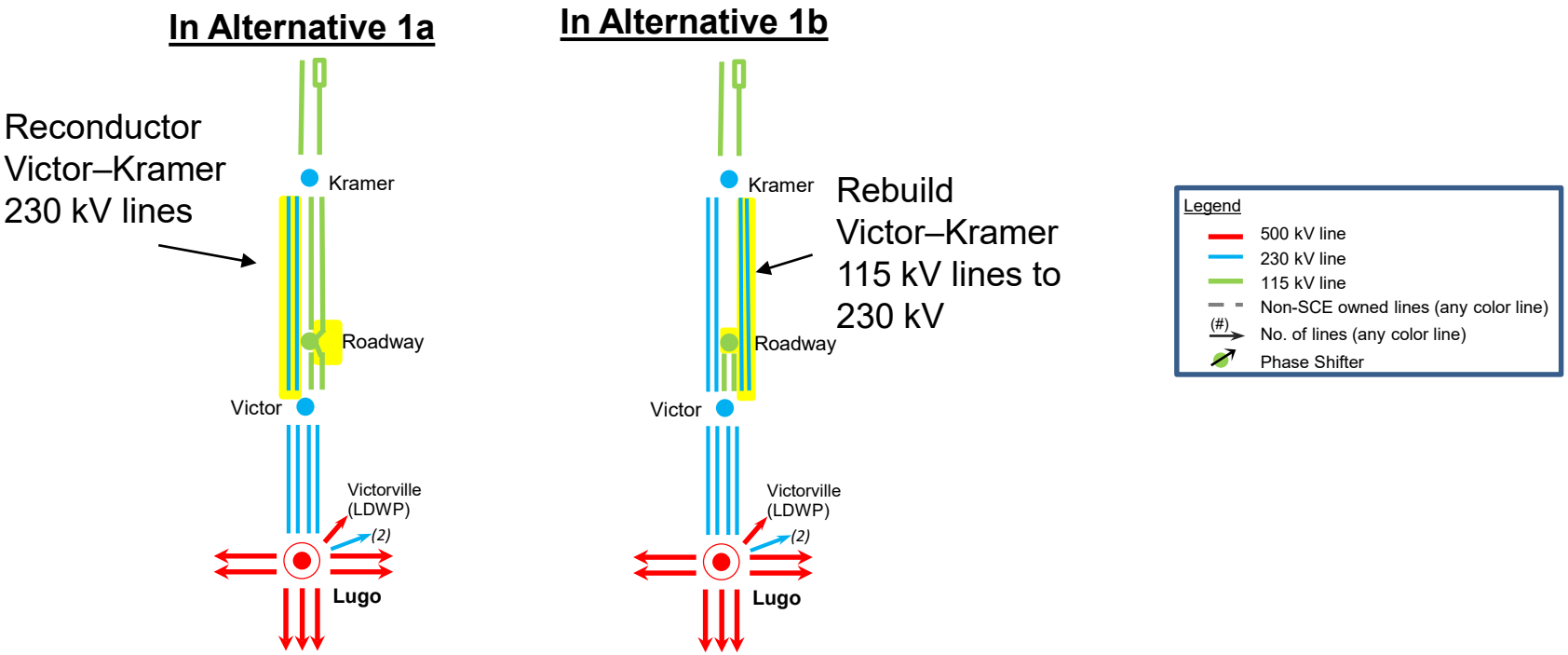

- Reconductoring Victor–Kramer 230 kV lines in Alternative 1a increases the capacity of the lines but will not address the impact of their P7 outage
- Rebuilding Victor–Kramer 115 kV lines to 230 kV in Alternative 1b increases capacity of the corridor and also addresses the impact of the P7 outage of the existing 230 kV lines
- Since Alternative 1a does not address the impact of the P7 outage of Victor–Kramer 230 kV lines, it is removed from further consideration

NOL Area 230 kV Potential upgrade alternative (Alternative 1b)

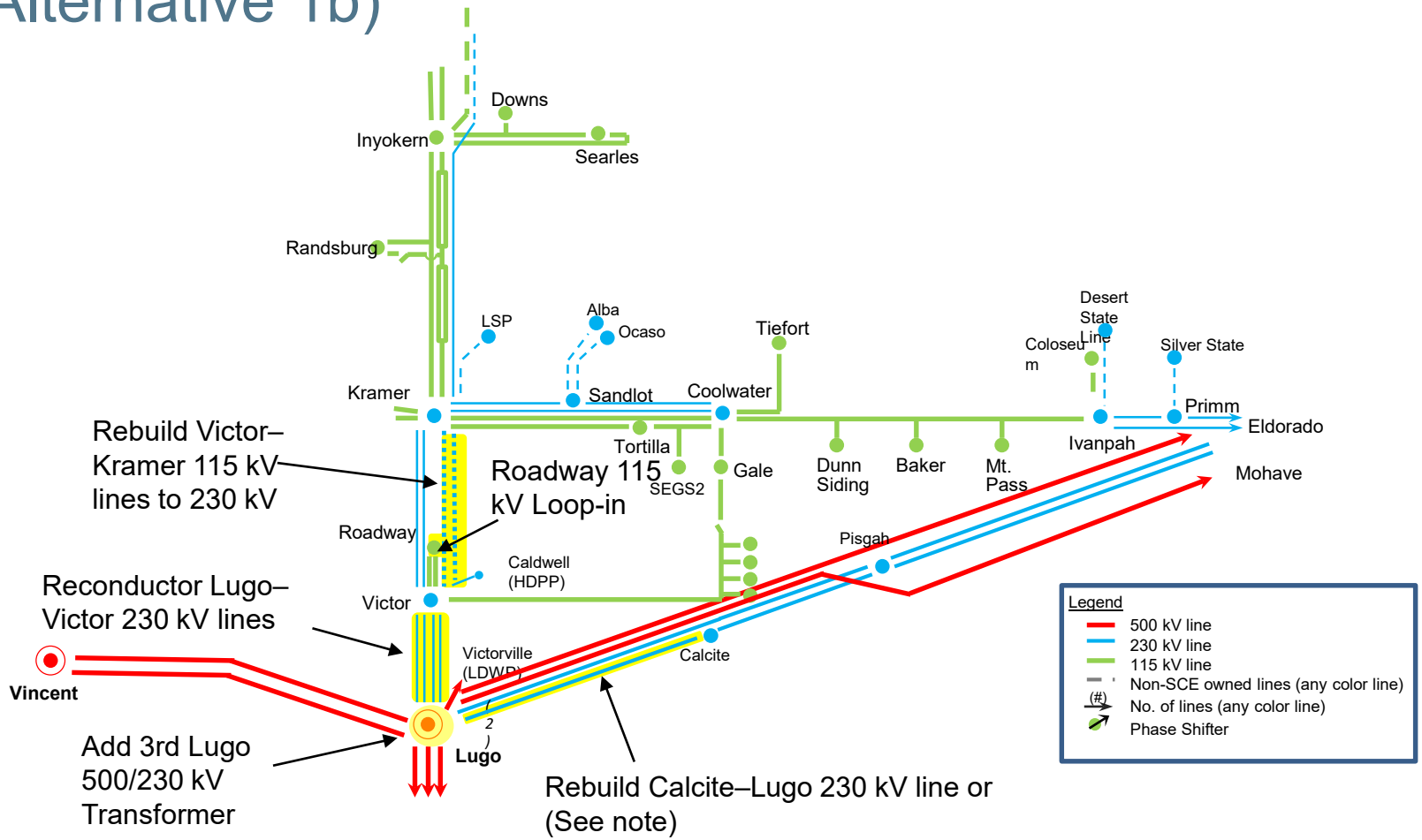

- Note: The ISO will also explore the feasibility of looping Pisgah–Lugo line into Calcite and upgrading both Calcite–Lugo lines instead of rebuilding the Calcite–Lugo 230 kV line

NOL Area 500 kV potential upgrade alternative (Alternative 2)

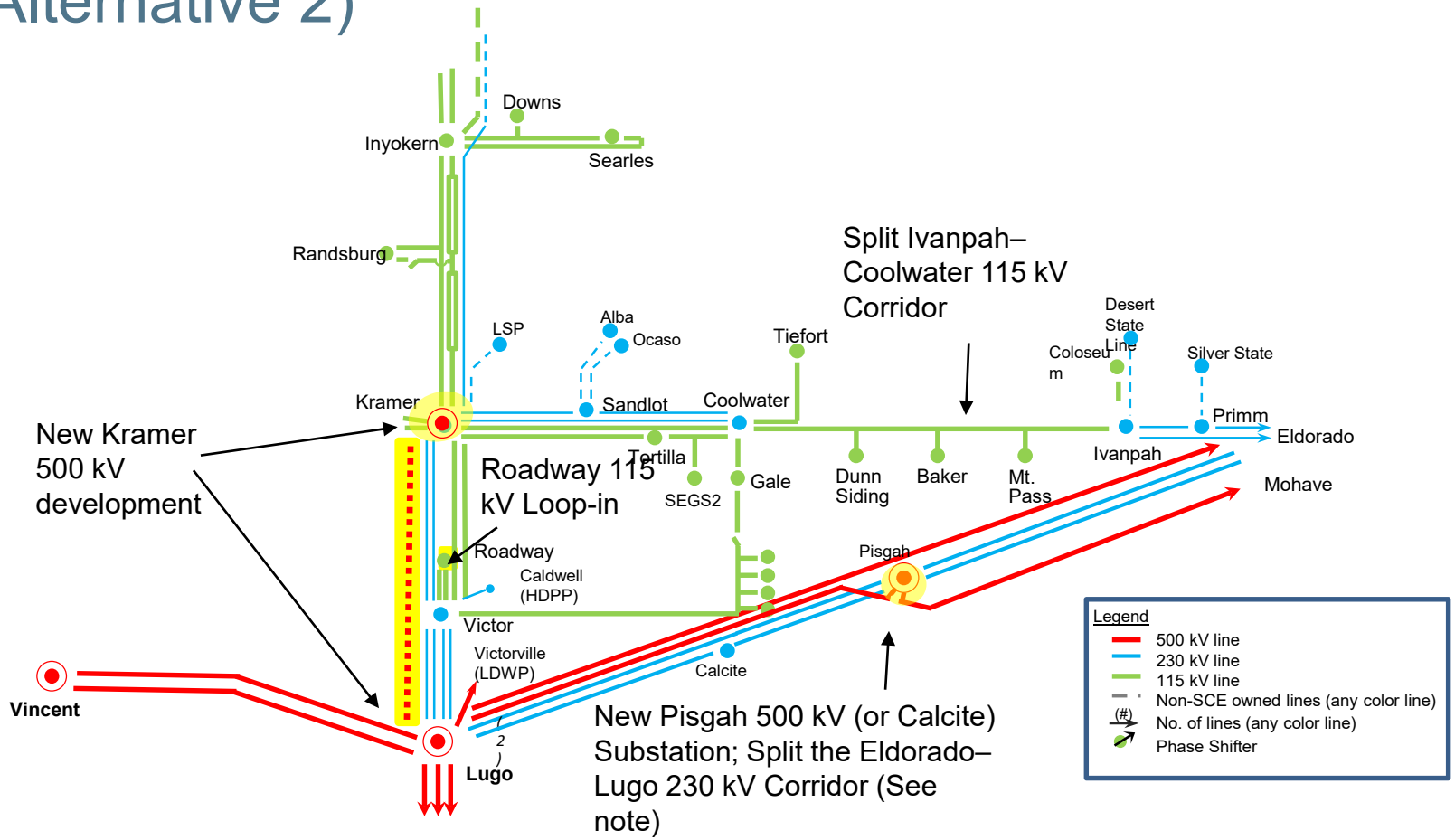

- Note: The ISO will also explore the feasibility of looping Pisgah–Lugo line into Calcite and upgrading both Calcite–Lugo lines instead of a new Pisgah 500 kV substation and associated upgrades/system changes

Summary of NOL assessment results

- Calcite–Lugo 230 kV line (on-peak) and the impact of P7 outage of Kramer–Victor 230 kV lines (off-peak) were found to require mitigation in the case of the Sensitivity Portfolio
- More comprehensive potential
- transmission upgrade alternatives for the base and sensitivity portfolio are identified taking into account the high congestion costs in the area based on PCM simulation and the increasing reliance and complexity of RAS in the area
- Preferred transmission development for the base and/or sensitivity portfolio will be identified after further evaluation

SCE Northern Area

On-peak SCE Northern study area constraints

Overloaded Facility	Contingency	More Limiting Scenario	Loading (%)	
			Base	Sensitivity
Windhub 500/230 kV #3 & #4	Windhub 500/230 kV #3 or #4	HSN/SSN	108%	110%

- The on-peak Windhub constraint can be mitigated by RAS

Off-peak SCE Northern study area constraints

Overloaded Facility	Contingency	Loading (%)	
		Base	Sensitivity
Windhub 500/230 kV #1 & #2	Windhub 500/230 kV #1 or #2	109%	110%
Windhub 500/230 kV #3 & #4	Windhub 500/230 kV #3 or #4	<100%	145%
Whilwind 500/230 kV Tr.	Base Case	<100%	105%
	Whilwind 500/230 kV Tr.	102%	132%
Antelope–Vincent 500 kV #1 & #2	Antelope–Vincent 500 kV #1 or #2	<100%	103%
Midway–Whirlwind 500 kV (PG&E)	Base Case	<100%	128%
Midway–Whirlwind 500 kV (SCE)	Vincent–Whilwind 500 kV	<100%	113%
	Antelope–Whilwind 500 kV	<100%	107%
	Antelope–Windhub 500 kV	<100%	104%
	Antelope–Vincent #1 or #2	<100%	103%

Potential mitigations

- Windhub and Whilwind 500/230 kV Transformer constraints – RAS or dispatching energy storage in charging mode
- Antelope–Vincent 500 kV constraint – Increasing the rating of the lines (~$15 million)
- Midway-Whilwind 500 kV (PG&E) – Increase the normal rating and/or bypass the series cap on the line. The ISO will continue to coordinate with PG&E and SCE regarding these mitigations.

SCE Eastern Area

On-peak SCE Eastern Area Deliverability Constraints

Overloaded Facility	Contingency	More Limiting Scenario	Loading (%)	
			Base	Sensitivity
Devers – Red Bluff 500 kV No.1	Devers – Red Bluff 500 kV No. 2	HSN	145	172
	N.Gila – Imperial Valley 500 kV No.1	HSN	<100	105
	Base Case	HSN	<100	104
	Devers – Mirage 230 kV No.1 AND Devers – Mirage 230 kV No.2	HSN	<100	101
	Eldorado – Lugo 500 kV No.1	HSN	<100	101
Devers – Red Bluff 500 kV No. 2	Devers – Red Bluff 500 kV No.1	HSN	142	169
	Base Case	HSN	<100	104
Devers – Valley 500 kV No.1	Devers – Valley 500 kV No.2	HSN	114	136
Serrano–Alberhill–Valley 500 kV No.1	Base Case	HSN	110	127
San Bernardino – Vista 230 kV No.1	Devers – Vista 230 kV No.1 AND Devers – Vista 230 kV No.2	HSN	111	127
	San Bernardino – Etiwanda 230 kV No.1	HSN	101	110
	San Bernardino – Etiwanda 230 kV No.1 AND Vista – Etiwanda 230 kV No.1	HSN	<100	104
	Serrano–Alberhill–Valley 500 kV No.1	HSN	<100	106

On-peak SCE Eastern Area Deliverability Constraints

Overloaded Facility	Contingency	More Limiting Scenario	Loading (%)	
			Base	Sensitivity
Vista – Etiwanda 230 kV No.1	Wildlife – Vista 230 kV No.1 AND Mira Loma – Vista 230 kV No.2	HSN	110	118
	Mira Loma – Wildlife 230 kV No.1 AND Mira Loma – Vista 230 kV No.2	HSN	102	108
	Serrano–Alberhill–Valley 500 kV No.1	HSN	103	106
San Bernardino – Etiwanda 230 kV No.1	San Bernardino – Vista 230 kV No.1	HSN	104	113
	Serrano–Alberhill–Valley 500 kV No.1	HSN	<100	103
Mira Loma – Mesa 500 kV No.1	Base Case	HSN	102	111
Colorado River – Red Bluff 500 kV No.1	Colorado River – Red Bluff 500 kV No.2	HSN	108	109
Colorado River 500/230 kV Transformer No.1	Colorado River 500/230 kV Transformer No.2	HSN	124	124
Colorado River 500/230 kV Transformer No.2	Colorado River 500/230 kV Transformer No.1	HSN	124	124
Devers 500/230 kV Transformer No.1	Serrano–Alberhill–Valley 500 kV No.1	HSN	102	117
Devers 500/230 kV Transformer No.2	Serrano–Alberhill–Valley 500 kV No.1	HSN	<100	109

On-peak SCE Eastern Area Deliverability Constraints

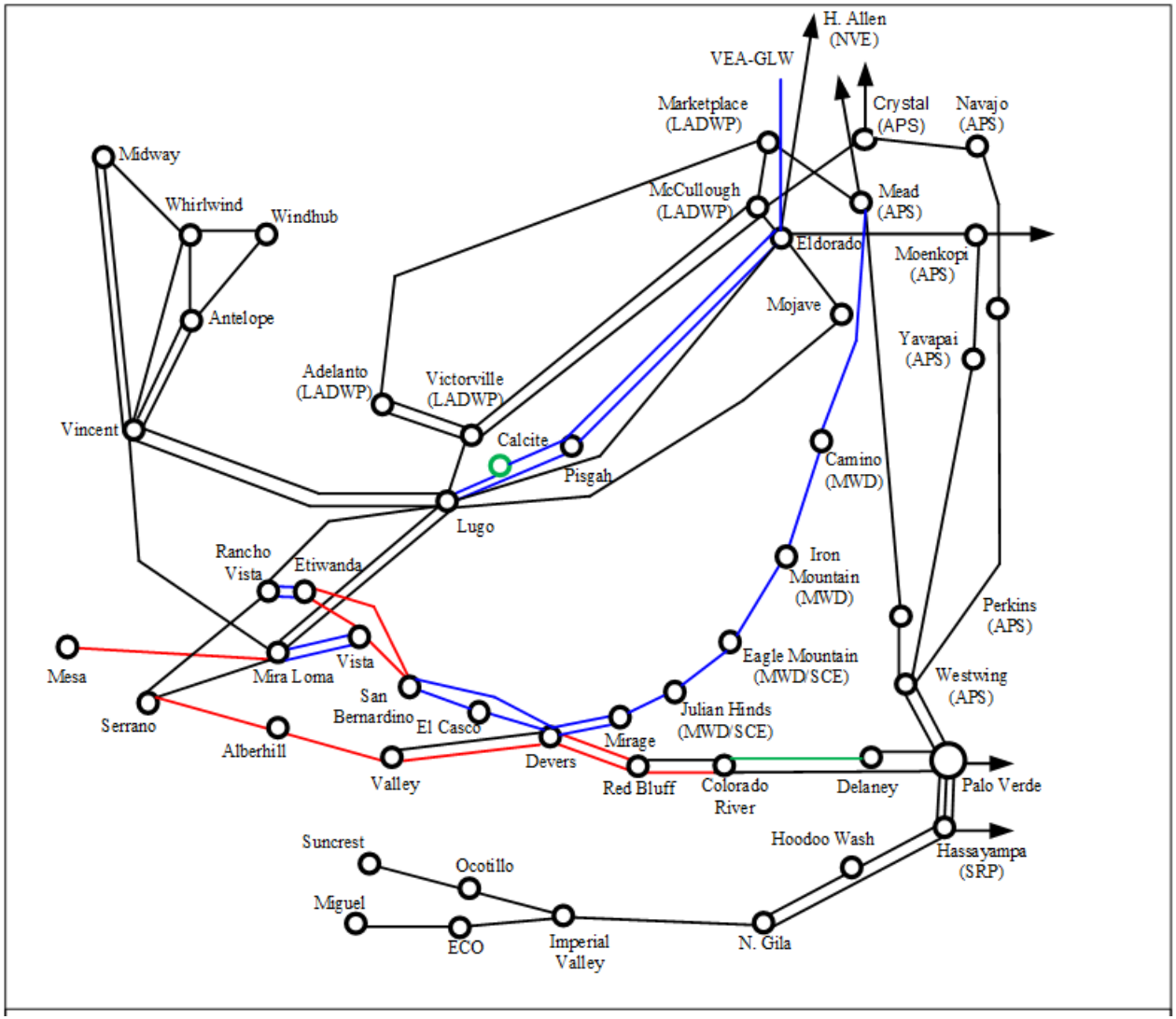

- Existing 500 kV Facilities
- Existing 230 kV Facilities
- Planned facilities assumed in the study
- Overload

California ISO

Potential On-peak SCE Eastern Area Mitigation Alternatives

Alternative	Description	Needed for Base Scenario	Needed for Sensitivity Scenario	Cost $M
1	500 kV and 230 kV line upgrades in the SCE Eastern area	X	X	$391
	Mira Loma-Mesa 500kV Underground Cable Addition	X	X	$30
	New Devers-Red Bluff 500 kV transmission line	X	X	$875
	New Devers-Mira Loma 500 kV transmission line		X	$1,143
	West of Colorado River CRAS	X	X	-
			Total	**$2439**
2	500 kV and 230 kV line upgrades in the SCE Eastern area	X	X	$391
	Mira Loma-Mesa 500kV Underground Cable Addition	X	X	$30
	New Imperial Valley-Serrano 500 kV transmission line with 70% compensation	X	X	$3,237
	New Imperial Valley-N.Gila 500 kV transmission line	X	X	$300
	New Serrano 4AA 500/230 kV Transformer Bank* OR New Mesa-Serrano 500 kV transmission line	X	X	$120*
	West of Colorado River CRAS	X	X	-
			Total	**$4078**

**Note: These options will be discussed further in the SCE Metro Area presentation*

California ISO

Line Upgrades in the SCE Eastern Area

Ratings for the following lines can be increased by various methods (e.g. fix ground clearance issues, line reconductor, upgrade terminal equipment), as needed

Line	Potential Rating Increase (N/E)	Cost $M
Colorado River-Red Bluff No.1	146% / 136%	$50
Devers-Red Bluff No.1	127% / 136%	$120
Devers-Red Bluff No.2	127% / 133%	$20
Devers-Valley No.1	132% / 136%	$45
Serrano-Alberhill-Valley No.1	132% / 100%	$60
San Bernardino-Etiwanda No.1	130% / 167%	$65
San Bernardino-Vista No.1	130% / 131%	$18
Vista-Etiwanda No.1	124% / 152%	$13
	Total	**$391**

Alternative 1

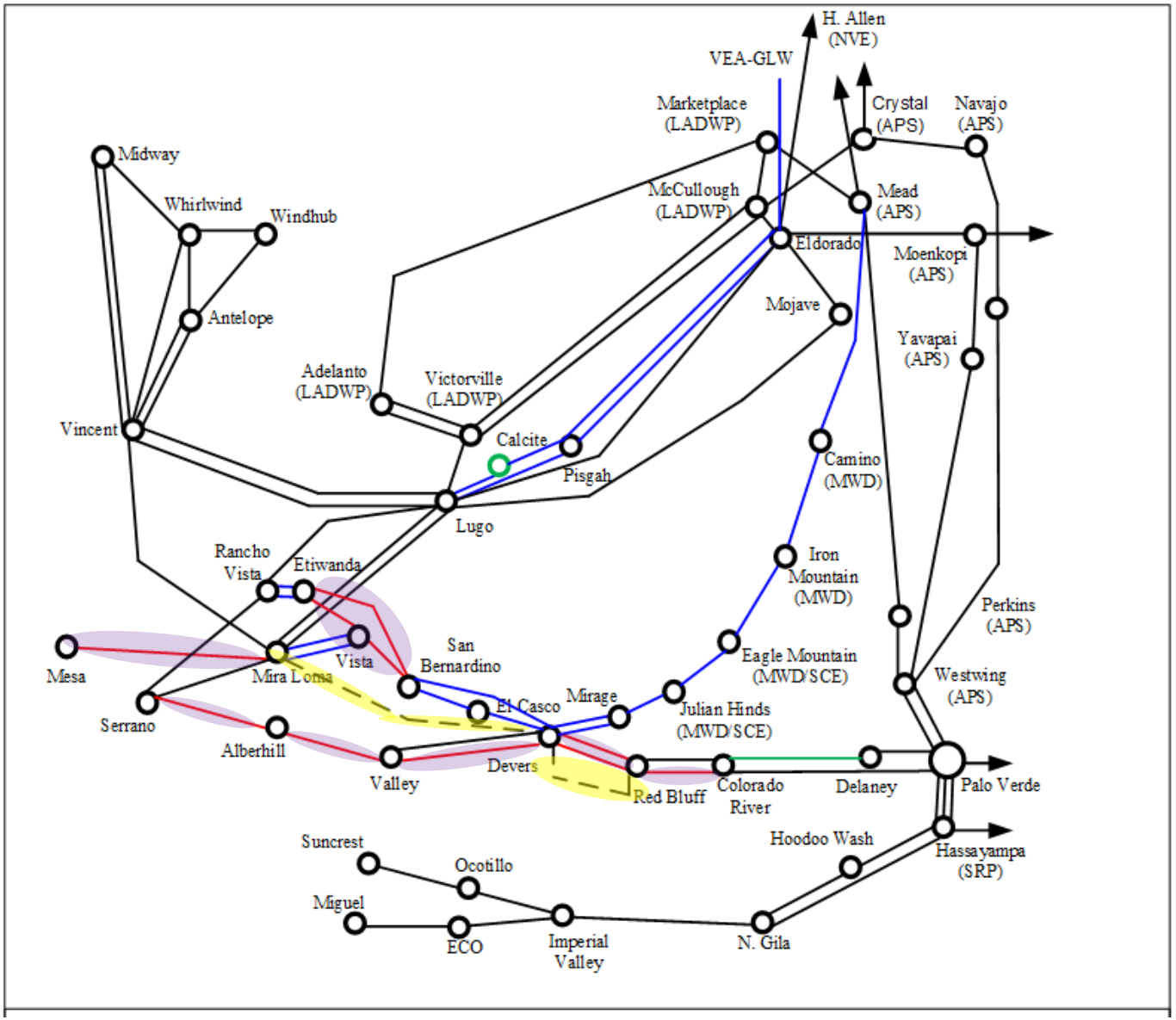

- Existing 500 kV Facilities
- Existing 230 kV Facilities
- Planned facilities assumed in the study
- Overload
- New 500 kV Facilities

- Proposed transmission builds
- Proposed line upgrades

California ISO

Alternative 2

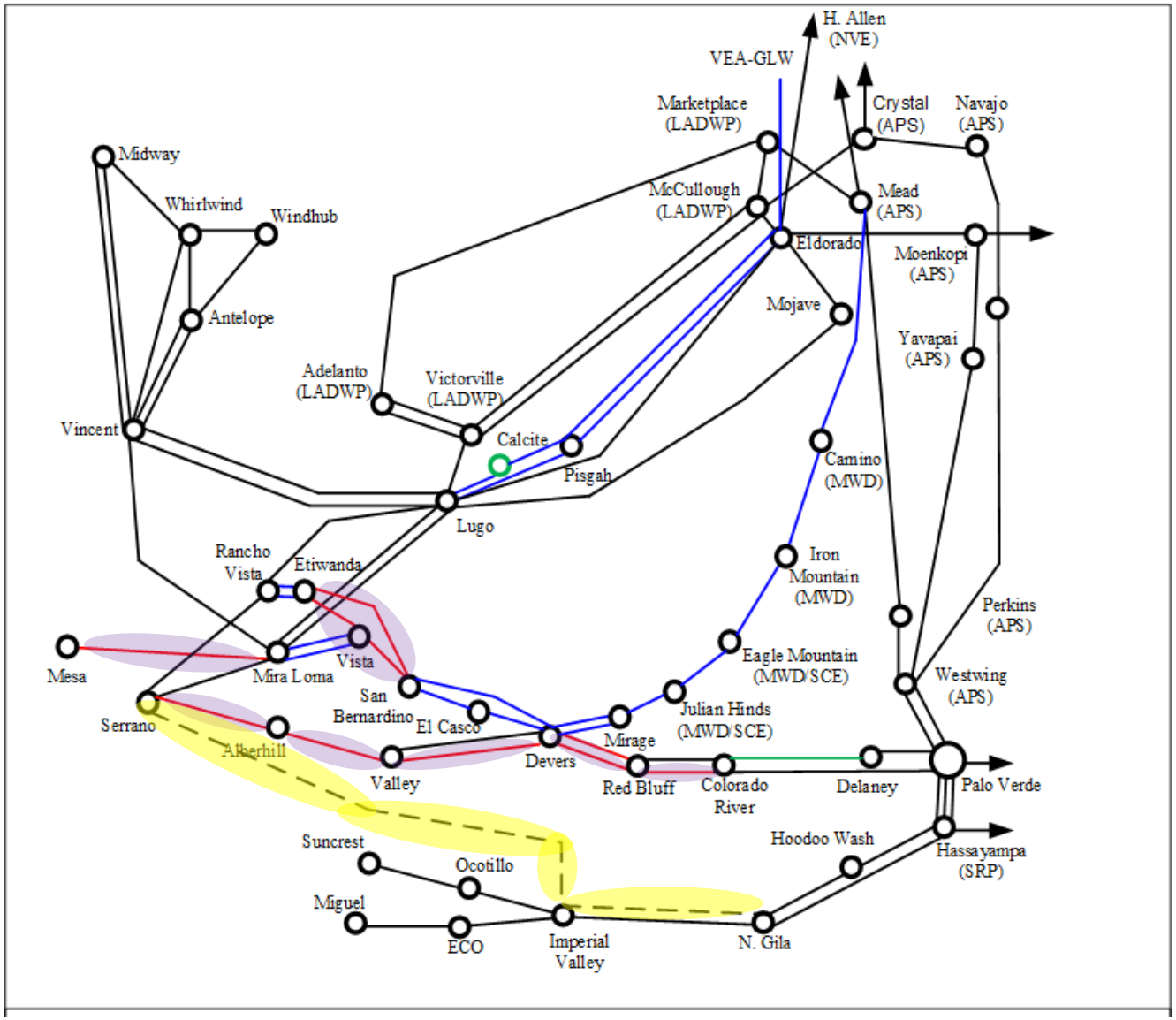

- Existing 500 kV Facilities
- Existing 230 kV Facilities
- Planned facilities assumed in the study
- Overload
- New 500 kV Facilities

- Proposed transmission builds
- Proposed line upgrades

California ISO

Off-peak SCE Eastern Area Deliverability Constraints and Mitigations

Overloaded Facility	Contingency	Loading (%)		Potential Mitigation
		Base	Sensitivity	
Colorado River 500/230 kV Transformer No.1	Colorado River 500/230 kV Transformer No.2	114	160	West of Colorado River CRAS and/or batteries in charging mode
Colorado River 500/230 kV Transformer No.2	Colorado River 500/230 kV Transformer No.1	114	160	
Red Bluff 500/230 kV Transformer No.1	Red Bluff 500/230 kV Transformer No.2	107	154	West of Colorado River CRAS and/or batteries in charging mode
Red Bluff 500/230 kV Transformer No.2	Red Bluff 500/230 kV Transformer No.1	107	154	
Devers – Red Bluff 500 kV No.1	Devers – Red Bluff 500 kV No.2	106	148	Refer to on-peak mitigation alternatives
Devers – Red Bluff 500 kV No.2	Devers – Red Bluff 500 kV No.1	103	144	
Devers – Valley 500 kV No.1	Devers – Valley 500 kV No.2	<100	105	Refer to on-peak mitigation alternatives
Devers 500/230 kV Transformer No.1	Serrano–Alberhill–Valley 500 kV No.1	<100	102	Refer to on-peak mitigation alternatives

Mitigation Assessment Summary

Base Scenario

- Upgrading the ratings of various 500 kV and 230 kV lines is common to both alternatives as a cost effective first step option to increase deliverability in the area
- Both Alternatives 1 & 2 mitigates the identified area deliverability constraints
- Continued use of the West of Colorado River CRAS required

Sensitivity Scenario

- Alternative 1 mitigates the identified area deliverability constraints
- For Alternative 2, the Devers-Red Bluff on-peak constraint requires use of the West of Colorado River CRAS

Preliminary results for East of Pisgah area

GLW, VEA and SCE East of Pisgah study areas

Generic Portfolio Resources in EOP Study Area

RESOLVE Resource Name	Resource Type	FCDS			Total (FCDS+EO)		
		Base	Sensitivity	Change	Base	Sensitivity	Change
Southern_NV_Eldorado_Solar	Solar	736	1,198	462	2,342	5,007	2,665
Southern_Nevada_Wind	Wind	442	442	-	442	442	-
Southern_Nevada_Geothermal	Geothermal	440	440	-	440	440	-
Southern_NV_Eldorado_Li_Battery	Li_Battery	863	2,271	1,408	863	2,271	1,408
		2,482	**4,351**	**1,870**	**1,179**	**3,272**	**2,092**

California ISO

VEA 138KV SYSTEM CONSTRAINTS

California ISO

Portfolio Resources Behind the Constraint

RESOLVE Resource Name	Resource Type	FCDS			Total (FCDS+EO)		
		Base	Sensitivity	Change	Base	Sensitivity	Change
VEA_Solar	Solar	-	300	300	50	1,150	1,100
VEA_Wind	Wind	-	-	-	-	-	-
VEA_Geothermal	Geothermal	440	440	-	440	440	-
VEA_Li_Battery	Li_Battery	40	590	540	40	590	540
		480	**1,330**	**840**	**530**	**2,180**	**1,640**

On-Peak Deliverability Study Results

Overloaded Facilities	Contingency	Loading (%)	
		Base Portfolio	Sensitivity Portfolio
Beatty – Lathrop SS 138kV Line	Base Case	342.93	513.95
Lathrop SS – Jackass Flats 138kV Line	Base Case	257.91	412.66
Lathrop SS – Valley SS 138kV Line	Base Case	202.22	367.37
Valley SS – Vista 138kV Line	Base Case	204.8	360.52
Jackass Flats – Mercury SS 138kV Line	Base Case	202.11	394.86
Vista – Pahrump 138kV Line	Base Case	192.31	404.07
Innovation 230/138kV Transformer	Base Case	176.75	280.78
Mercury SS –Innovation 138kV Line	Base Case	149.06	257.02
Pahrump – Gamebird 138kV Line	Base Case	<100	164.1
Jackass Flats – Mercury SS 138kV Line	Valley SS – Vista 138kV	374.59	745.68
Lathrop SS – Jackass Flats 138kV Line	Valley SS – Vista 138kV	284.34	561.82
IS Tap – Radar – Northwest 138kV Line	Innovation 230/138kV Transformer	178.69	278.44
Lathrop SS – Jackass Flats 138kV Line	Trout Canyon-Sloan Canyon 230kV Nos 1 & 2	177.86	356.16
Mercury SS –Innovation 138kV Line	Trout Canyon-Sloan Canyon 230kV Nos 1 & 2	171.95	313.8
Valley SS – Vista 138kV Line	Desert View-Northwest 230kV Nos 1 & 2	160.78	286.35
Vista – Pahrump 138kV Line	Desert View-Northwest 230kV Nos 1 & 2	151.56	318.29
Valley SS – Vista 138kV Line	Innovation-Desert View 230kV Nos 1 & 2	159.93	282.99
Vista – Pahrump 138kV Line	Innovation-Desert View 230kV Nos 1 & 2	150.72	314.93

System One-line Diagram

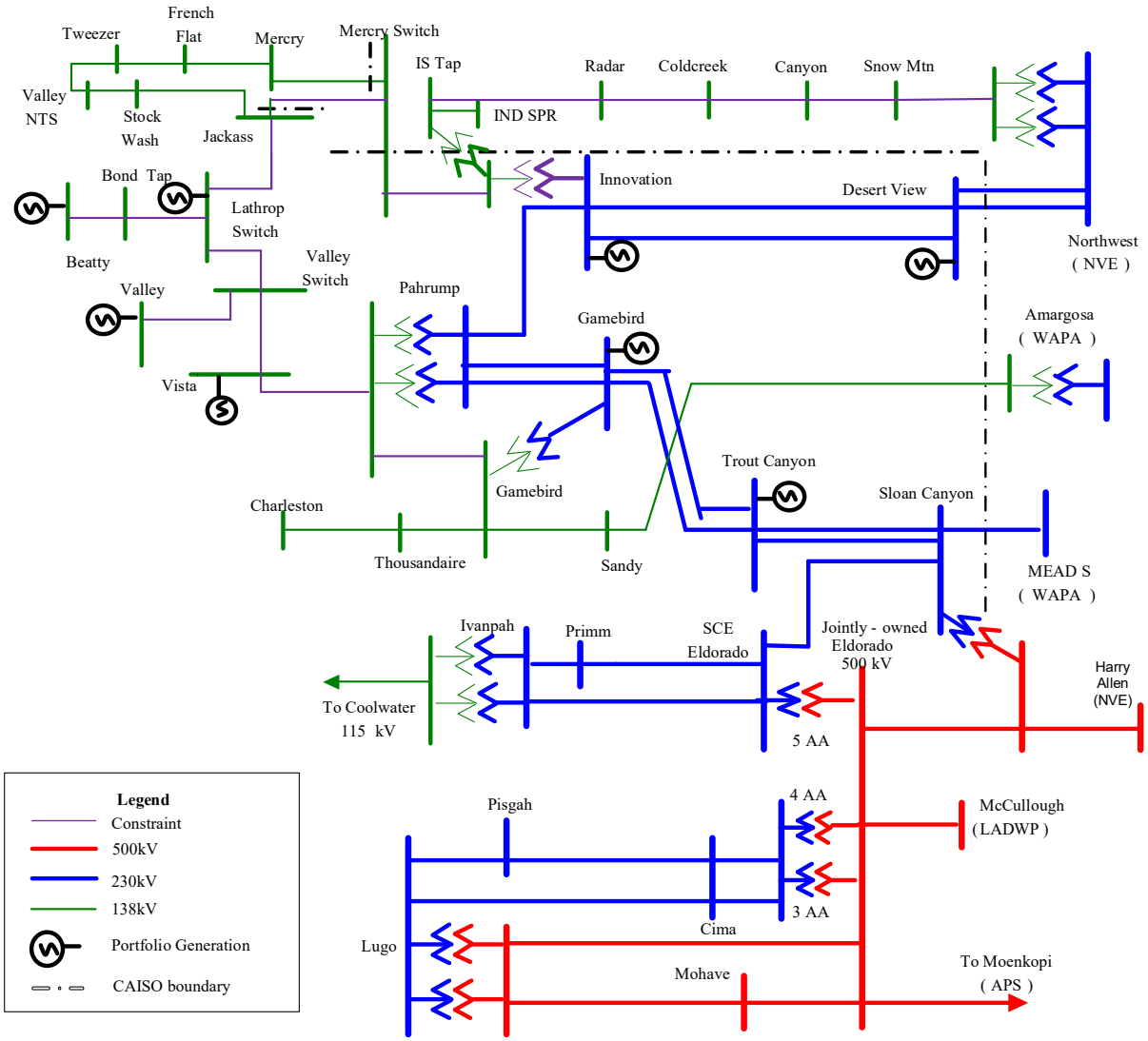

Beatty 230kV Upgrade

Scope

- New Johnnie 230kV station, loop into Pahrump-Innovation 230kV line
- 2nd Johnnie-Innovation 230kV line, ~36 miles
- New Beatty 230kV, Lathrop 230kV, Valley 230kV and Vista 230kV switching stations
- New Beatty–Lathrop 230kV line, ~32 miles
- New Lathrop-Valley-Johnnie 230kV DCTL, ~35 miles
- New Pahrump-Vista-Johnnie 230kV line, ~20 miles

With the 230kV upgrade modeled, portfolio resources at Beatty, Valley, Lathrop and Vista 138kV buses were relocated to 230kV buses in both base and sensitivity portfolio analysis

Cost Estimate: $250M

Results with Mitigation: Beatty 230kV Upgrade is sufficient to mitigate VEA 138kV system constraints in both base and sensitivity

Project One-line Diagram

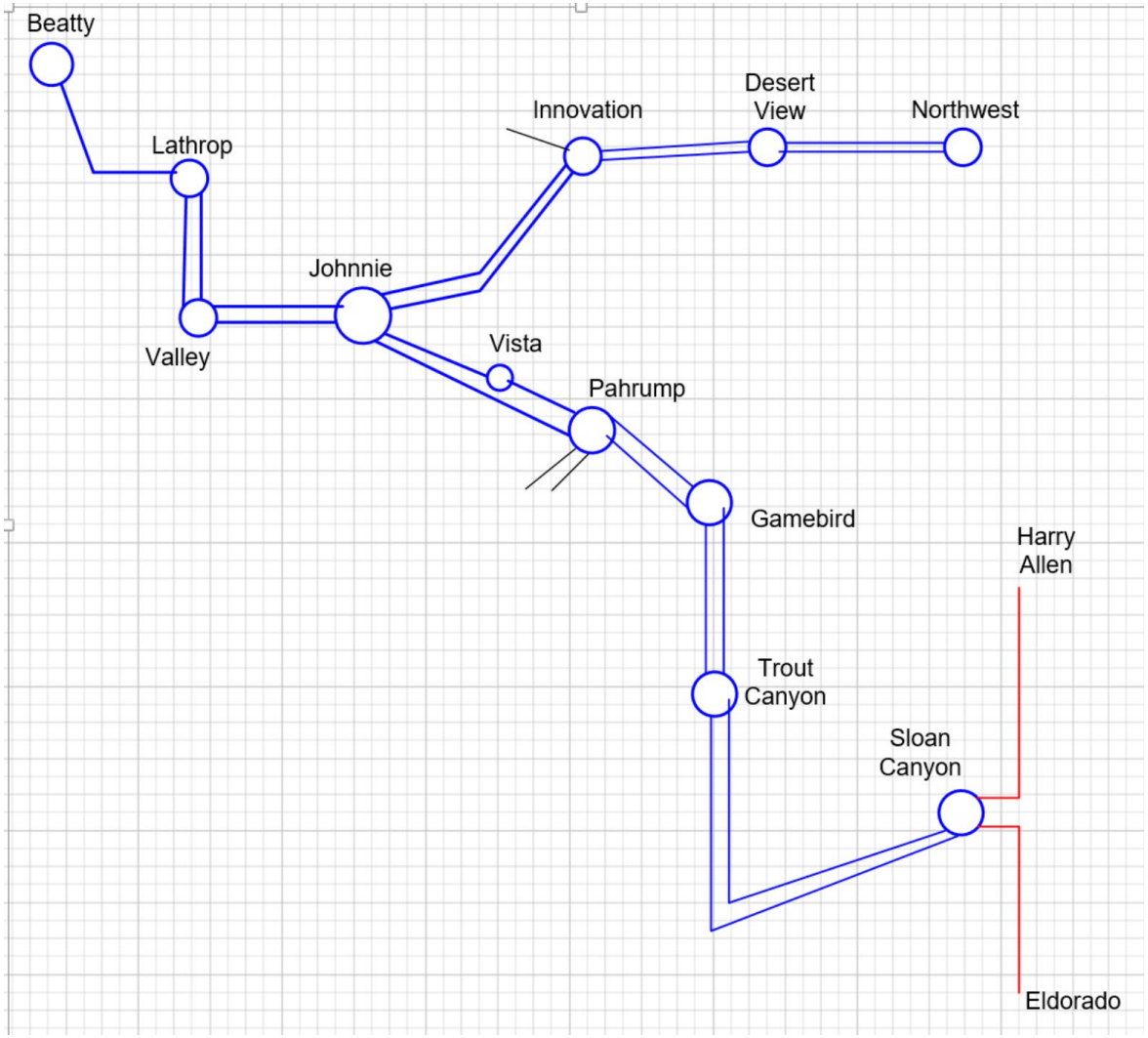

GLW 230KV SYSTEM CONSTRAINTS

California ISO

Portfolio Resources Behind the Constraint

RESOLVE Resource Name	Resource Type	FCDS			Total (FCDS+EO)		
		Base	Sensitivity	Change	Base	Sensitivity	Change
Southern_Nevada_Solar	Solar	736	1,198	462	937	2,340	1,403
Southern_Nevada_Wind	Wind	442	442	-	442	442	-
Southern_Nevada_Geothermal	Geothermal	440	440	-	440	440	-
Southern_NV_ Li_Battery	Li_Battery	635	2,022	1,849	635	2,022	1,849
		1,790	**4,102**	**2,311**	**1,992**	**5,244**	**3,252**

On-Peak Deliverability Constraints

Overloaded Facilities	Contingency	Loading (%)		Undeliverable Portfolio MW
		Base Portfolio	Sensitivity Portfolio	
Innovation – Desert View 230kV No.1 line	Basecase	<100	156.8	1,090
Innovation – Desert View 230kV No.2 line	Basecase	<100	105.28	180
IS Tap – Radar – Northwest 138kV line	Desert View-Northwest 230kV Nos 1 & 2	111.02	246.81	1,580
	Innovation-Desert View 230kV Nos 1 & 2	103.52	211.87	
	Trout Canyon-Sloan Canyon 230kV Nos 1 & 2	<100	114.55	
Innovation – Desert View 230kV No.1 line	Trout Canyon-Sloan Canyon 230kV Nos 1 & 2	<100	211.06	1,320
	Innovation-Desert View 230kV No.2	<100	189.66	
	Trout Canyon-Sloan Canyon 230kV No.1 or No.2	<100	138.03	
	Gamebird-Trout Canyon Nos.1&2	<100	123.76	
Innovation – Desert View 230kV No.2 line	Trout Canyon-Sloan Canyon 230kV No.1 or No.2	<100	153.71	780
	Innovation-Desert View 230kV No.1	<100	113.69	
Amargosa 230/138kV Transformer, Sandy-Amargosa and Gamebird-Sandy 138kV lines	Desert View-Northwest 230kV Nos 1 & 2	<100	161.04	1,015
	Innovation-Desert View 230kV Nos 1 & 2	<100	147.63	
	Trout Canyon-Sloan Canyon 230kV Nos 1 & 2	<100	175.22	
Gamebird 230/138kV transformer	Trout Canyon-Sloan Canyon 230kV No.1 or No.2	<100	116.84	240
Innovation PST	Desert View-Northwest 230kV Nos 1 & 2	<100	141.17	940
	Innovation-Desert View 230kV Nos. 1 & 2	<100	122.75	

System One-line Diagram

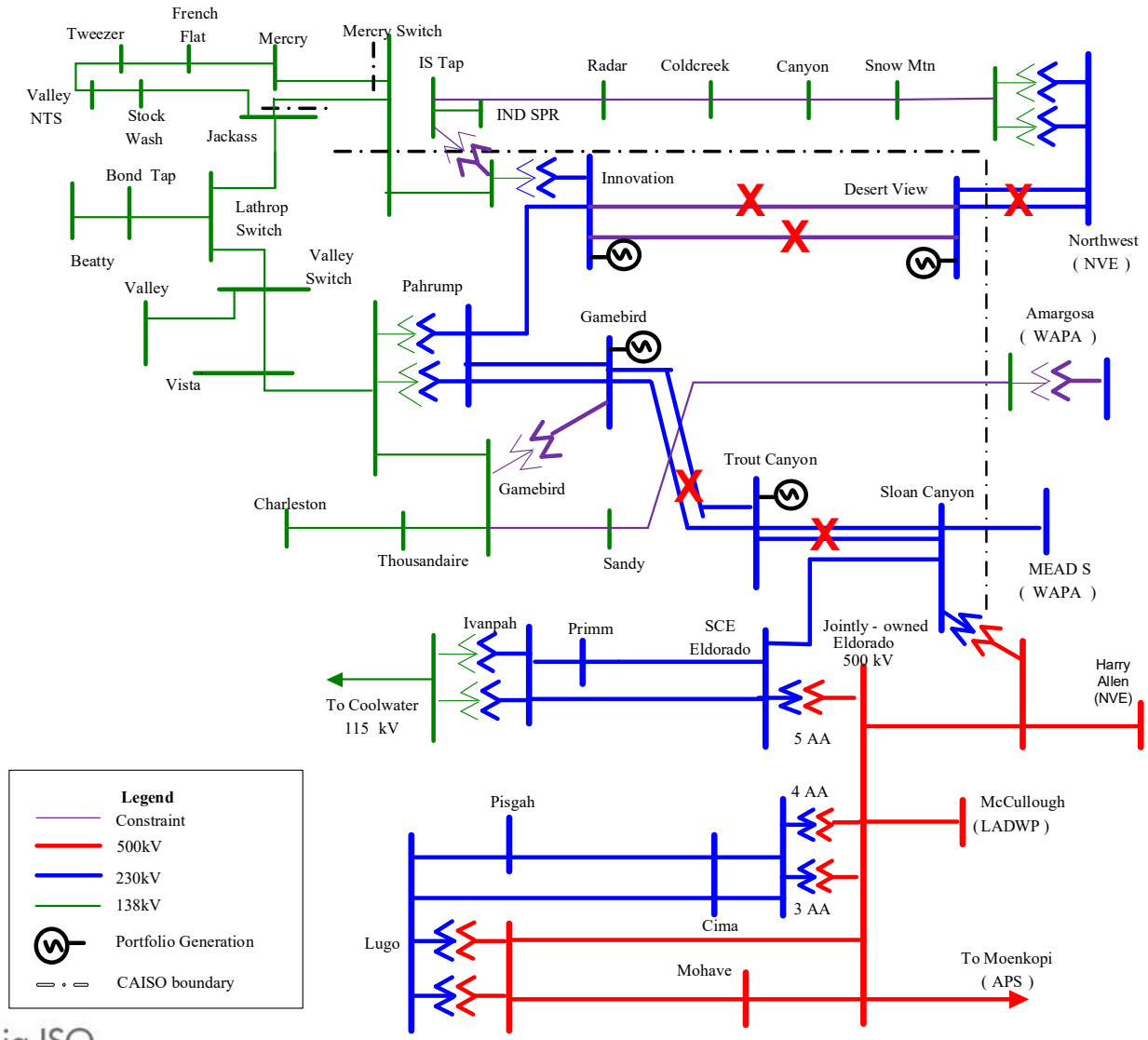

California ISO

Alt 1. Innovation – Desert View 230kV Lines Upgrade

Scope

- Reconductor Innovation – Desert View No.1 line with a normal rating of 1,154MVA and an emergency rating of 1,578MVA
- Resizing Innovation – Desert View No.2 line with a normal rating of 1,154MVA and an emergency rating of 1,578MVA
- Expand Innovation and Sloan Canyon RAS to trip generation for Innovation – Desert View Nos.1&2, Desert View – Northwest Nos. 1&2 and Trout Canyon – Sloan Canyon Nos. 1&2 P7 contingencies

Cost Estimate: $22M*

*Cost of resizing Innovation – Desert View No.2 Line is not included as the scope is part of the GLW Upgrade project approved in 2021-2022 Transmission Plan

Alt 2. South Baker 500kV Project

Scope

- New South Baker 500kV station
- New Trout Canyon 500kV bus and install two 500/230kV transformers
- New Trout Canyon – South Baker 500kV DCTL line with a normal rating of 4,796MVA and emergency rating of 5,506MVA*, 70% series compensation, ~ 90 miles
- New South Baker – Lugo 500kV line with 70% series compensation ~ 90 miles
- Build Trout Canyon – Sloan Canyon 230kV DCTL to 500kV construction, ~ 60 miles

Cost Estimate: $2,560M**

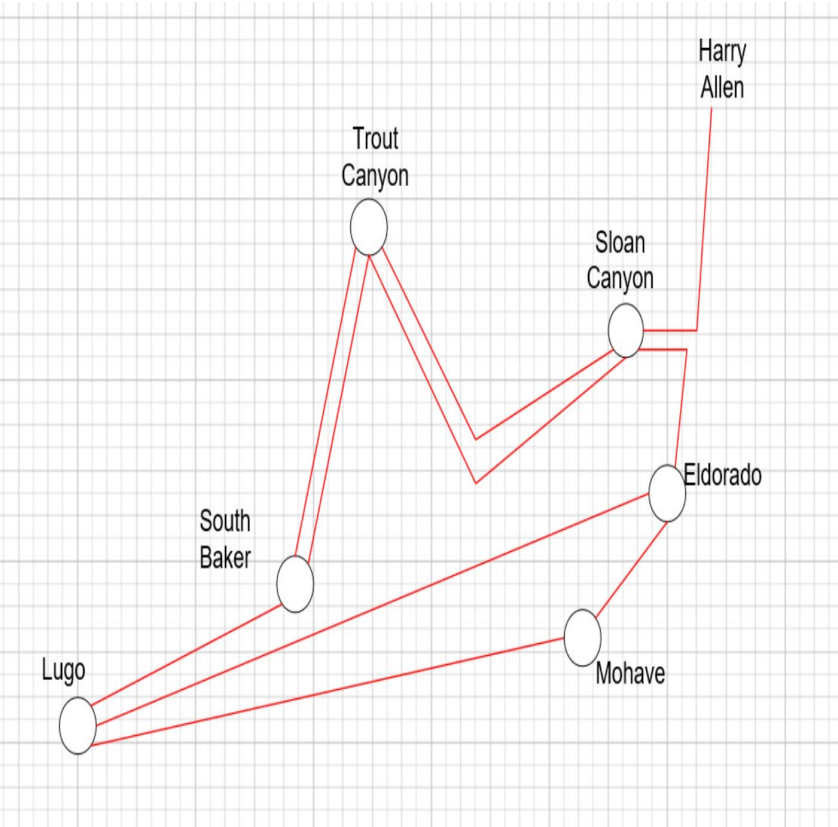

*GLW request window submittal rating
**Incremental cost of building Trout Canyon-Sloan Canyon 230kV DCTL to 500kV construction is used

Results with Mitigation

Overloaded Facilities	Contingency	Loading (%)		Undeliverable Portfolio MW
		Base Portfolio	Sensitivity Portfolio	
Innovation-Desert View 230kV No.1	Gamebird-Trout Canyon 230kV Nos.1&2	<100	120.96	265
Pahrump 230/138kV Transformers No.1 and 2	Pahrump-Gamebird 230kV Nos. 1&2 lines	<100	153.71	200
Pahrump-Gamebird 138kV line		<100	115.23	
Trout Canyon 500/230kV Transformer No.1 or 2	Trout Canyon 500/230kV Transformer No.2 or 1	<100	122.52	420

- RAS is recommended to monitor the two P7 contingencies and trip generation to mitigate the overloads.
- 3rd 500/230kV transformer at Trout Canyon

Alt 3. Trout Canyon – Lugo 500kV DCTL Project A

Scope

- New Trout Canyon 500kV bus and install two 500/230kV transformers
- New Trout Canyon – Lugo 500kV DCTL line with a normal rating of 4,796MVA and emergency rating of 5,506MVA and 70% series compensation, ~ 180 miles
- Build Trout Canyon – Sloan Canyon 230kV DCTL to 500kV construction, ~ 60 miles

Cost Estimate: 2,841M

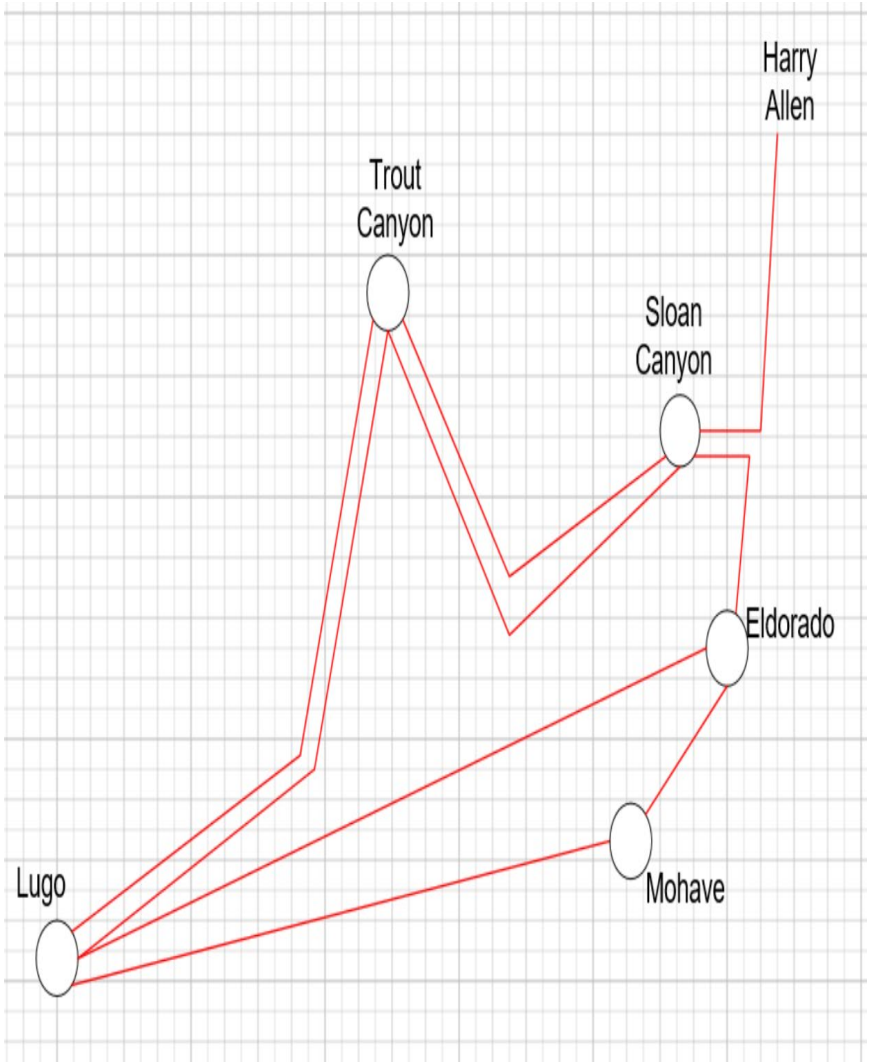

Results with Mitigation

Overloaded Facilities	Contingency	Loading (%)		Undeliverable Portfolio MW
		Base Portfolio	Sensitivity Portfolio	
Innovation-Desert View 230kV No.1	Gamebird-Trout Canyon 230kV Nos.1&2	<100	120.63	265
Pahrump 230/138kV Transformers No.1 and 2	Pahrump-Gamebird 230kV Nos. 1&2 lines	<100	123.43	300
Pahrump-Gamebird 138kV line		<100	128.71	
Trout Canyon 500/230kV Transformer No.1 or 2	Trout Canyon 500/230kV Transformer No.2 or 1	<100	125.37	470

- RAS is recommended to monitor the two P7 contingencies and trip generation to mitigate the overloads.
- 3rd 500/230kV transformer at Trout Canyon

Alt 4. Trout Canyon – Lugo 500kV DCTL Project B

Scope

- New Trout Canyon 500kV bus and install three 500/230kV transformers
- New Trout Canyon – Lugo 500kV DCTL line with a normal rating of 4,796MVA and emergency rating of 5,506MVA and 70% series compensation, ~ 180 miles

Cost Estimate: 2,729M

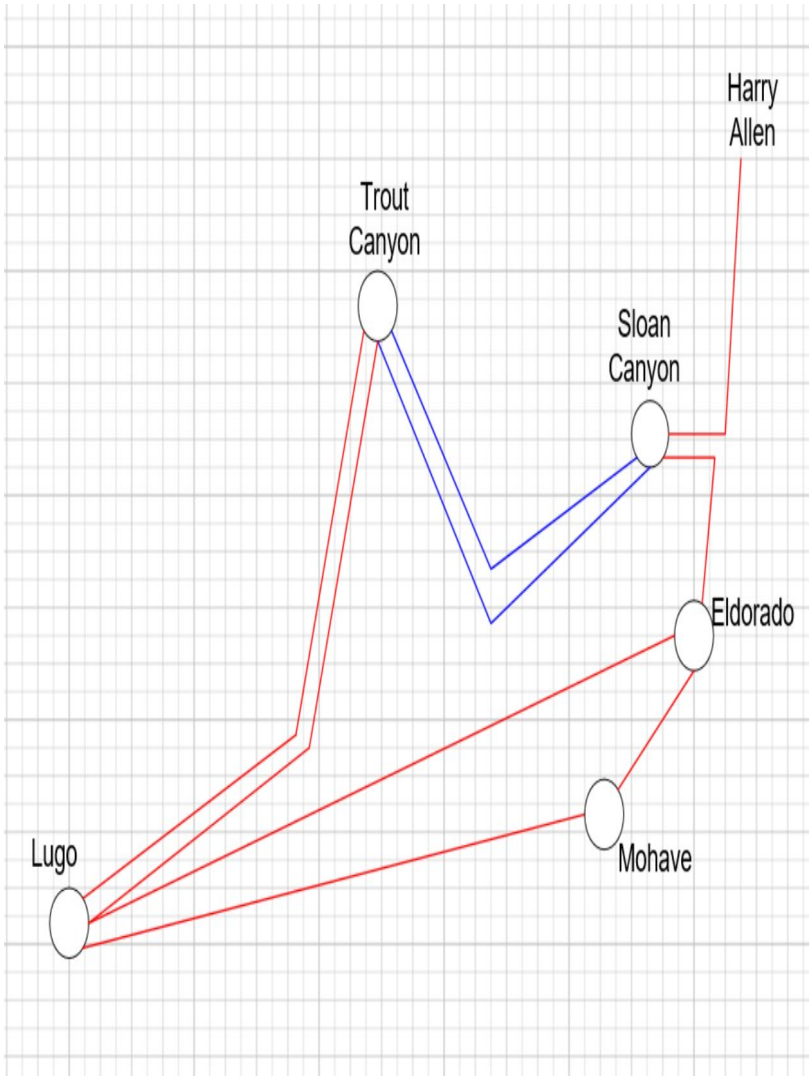

Results with Mitigation

Overloaded Facilities	Contingency	Loading (%)		Undeliverable Portfolio MW
		Base Portfolio	Sensitivity Portfolio	
Innovation-Desert View 230kV No.1	Gamebird-Trout Canyon 230kV Nos.1&2	<100	119.7	325
	Trout Canyon – Lugo 500kV Nos. 1&2	<100	110.09	
Pahrump 230/138kV Transformers No.1 and 2	Pahrump-Gamebird 230kV Nos. 1&2 lines	<100	142.58	520
Pahrump-Gamebird 138kV line		<100	159.89	

- RAS is recommended to monitor the P7 contingencies and trip generation to mitigate the overloads.

Alt 5. Trout Canyon – Sloan Canyon 500kV Project

Scope

- New Trout Canyon 500kV bus and install two 500/230kV transformers
- Build Trout Canyon – Sloan Canyon 230kV DCTL to 500kV construction, ~ 60 miles
- New Sloan Canyon – Eldorado 500kV line, ~ 3 miles

Cost Estimate: $214M

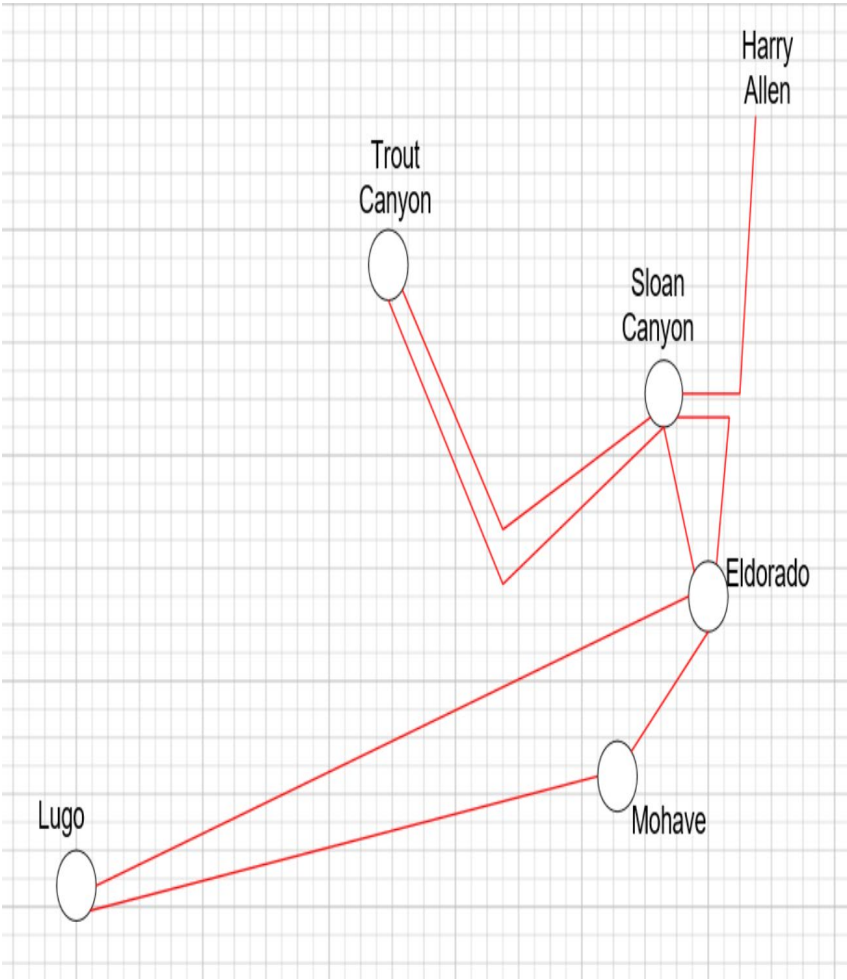

Results with Mitigation:

Overloaded Facilities	Contingency	Loading (%)		Undeliverable Portfolio MW
		Base Portfolio	Sensitivity Portfolio	
Innovation-Desert View 230kV No.1	Gamebird-Trout Canyon 230kV Nos.1&2	<100	121.82	1400
	Trout Canyon-Sloan Canyon 500kV Nos.1&2	<100	217.76	
	Innovation-Desert View 230kV No.2	<100	119.08	
Innovation-Desert View 230kV No.2	Trout Canyon-Sloan Canyon 500kV Nos.1&2	<100	151.42	800
Multiple 138kV facilities	Trout Canyon-Sloan Canyon 500kV Nos.1&2	<100	172.28	800

- Rebuild Innovation-Desert View 230kV No.1.
- RAS is recommended to monitor the P7 contingencies and trip generation to mitigate the overloads

LUGO – VICTORVILLE 500KV CONSTRAINT

California ISO

Portfolio Resources Behind the Constraint

RESOLVE Resource Name	Resource Type	FCDS			Total (FCDS+EO)		
		Base	Sensitivity	Change	Base	Sensitivity	Change
Southern_NV_Eldorado_Solar	Solar	736	1,198	462	2,342	5,007	2,665
Southern_Nevada_Wind	Wind	442	442	-	442	442	-
Southern_Nevada_Geothermal	Geothermal	440	440	-	440	440	-
Southern_NV_Eldorado_Li_Battery	Li_Battery	863	2,271	1,408	863	2,271	1,408
		2,482	**4,351**	**1,870**	**1,179**	**3,272**	**2,092**

On-Peak Deliverability Study Results

Overloaded Facilities	Contingency	Loading (%)	
		Base Portfolio	Sensitivity Portfolio
Victorville – McCullough 500kV Line	Base Case	<100	112.11
Victorville – McCullough 500kV Line	Eldorado-Lugo 500kV Line	<100	112.81
Lugo – Victorville 500kV Line	Base Case	<100	106.4
Lugo-Victorville 500kV Line	Eldorado-Lugo 500kV Line	103.5	125.6
Lugo-Victorville 500kV Line	Lugo-Mohave 500kV Line	<100	107.39
Lugo-Victorville 500kV Line	Eldorado-Mohave 500kV Line	<100	104.94
Eldorado – McCullough 500kV Line	Eldorado-Lugo 500kV Line	<100	118.57
Eldorado – Lugo 500kV Line	Lugo-Victorville 500kV Line	<100	113.03

System One-line Diagram

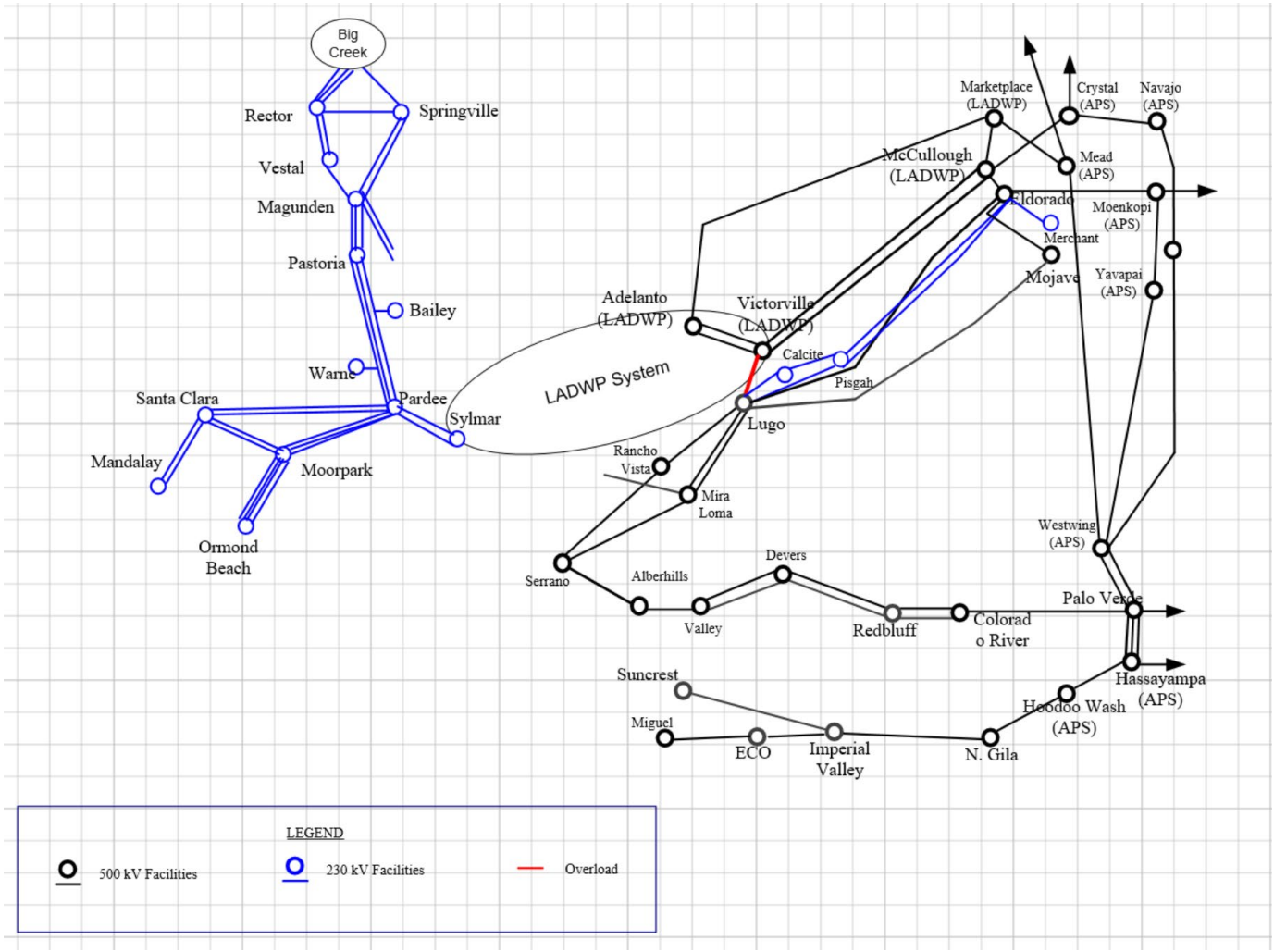

Alt 1. New Eldorado – Lugo 500kV No.2 Line

Scope

- New Eldorado – Lugo 500kV No.2 line with 65% series compensation, ~180 miles

Cost Estimate: $2,019M

Alt 2. New South Baker – Lugo 500kV Line

As discussed in South Baker 500kV Project

Alt 3. New Trout Canyon – Lugo 500kV DCTL

As discussed in Trout Canyon – Lugo 500kV Project

Deliverability Study Results with Mitigation

Overloaded Facilities	Contingency	Loading (%)		
		Alt 1	Alt 2	Alt 3
Victorville – McCullough 500kV Line	Base Case	<98	<98	<98
Victorville – McCullough 500kV Line	Eldorado-Lugo 500kV Line	<98	<98	<98
Lugo – Victorville 500kV Line	Base Case	<98	<98	<98
Lugo-Victorville 500kV Line	Eldorado-Lugo 500kV Line	<98	<98	<98
Lugo-Victorville 500kV Line	Lugo-Mohave 500kV Line	<98	<98	<98
Lugo-Victorville 500kV Line	Eldorado-Mohave 500kV Line	<98	<98	<98
Eldorado – McCullough 500kV Line	Eldorado-Lugo 500kV Line	<98	<98	<98
Eldorado – Lugo 500kV Line	Lugo-Victorville 500kV Line	<98	<98	<98

On-Peak EOP Study Area Mitigation Summary

Alternative	Description	Cost $M
1	- Beatty 230kV Upgrade	$250
	- Innovation – Desert View 230kV rebuild	$22
	- Eldorado – Lugo 500kV No.2 Line	$2,019
	- RAS to protect against P7 contingency overload	
	Total	**$2,316**
2	- Beatty 230kV Upgrade	$250
	- South Baker 500kV Project with 3rd Trout Canyon transformer	$2,576
	- RAS to protect against P7 contingency overload	
	Total	**$2,826**
3	- Beatty 230kV Upgrade	$250
	- Trout Canyon – Lugo 500kV DCTL Project A with 3rd Trout Canyon transformer	$2,857
	- RAS to protect against P7 contingency overload	
	Total	**$3,107**
4	- Beatty 230kV Upgrade	$250
	- Trout Canyon – Lugo 500kV DCTL Project B	$2,729
	- RAS to protect against P7 contingency overload	
	Total	**$2,979**
5	- Beatty 230kV Upgrade	$250
	- Trout Canyon – Sloan Canyon 500kV Line Project	$214
	- Innovation – Desert View 230kV No.1 Rebuild	$22
	- Eldorado – Lugo 500kV No.2 Line	$2,019
	- RAS to protect against P7 contingency overload	
	Total	**$2,505**

LUGO – CALCITE 230KV CONSTRAINT

California ISO

Portfolio Resources Behind the Constraint

RESOLVE Resource Name	Resource Type	FCDS			Total (FCDS+EO)		
		Base	Sensitivity	Change	Base	Sensitivity	Change
Pisgah_Calcite_Solar	Solar	50	150	100	400	750	350
Pisgah_Calcite_Wind	Wind	-	100	100	-	100	100
Pisgah_Calcite_Li_Battery	Li_Battery	250	450	200	250	450	200
		300	**700**	**400**	**650**	**1,300**	**650**

On-Peak Deliverability Study Results

Overloaded Facilities	Contingency	Rating	Loading (%)		Undeliverable Portfolio MW
			Base Portfolio	Sensitivity Portfolio	
Calcite-Lugo 230kV Line	Base Case	289	<100	132.26	210
	Lugo-Victorville 500kV line	289	107.26	148.86	
	Eldorado-Lugo 500kV Line	289	105.31	147.2	
	Lugo-Mohave 500kV Line	289	101.88	140.25	
	Eldorado-Mohave 500kV Line	289	<100	138.71	

Potential Mitigations*

- Reconductor Pisgah-Calcite 230kV line
- Loop Calcite into Pisgah-Lugo line and increase the rating of both lines
- New 500kV substation near Pisgah and loop into Eldorado-Lugo or Lugo-Mohave 500kV line; open Eldorado-Pisgah-Lugo 230kV corridor**

*Please refer to NOL presentation for detailed info
**Need coordination with South Baker 500kV alternative

Off-peak EOP study area deliverability constraints

Overloaded Facility	Contingency	Loading (%)	
		Base	Sensitivity
IS Tap-Northwest 138kV line	Desert View-Northwest 230kV Nos 1 & 2 lines	151.87	293.63
	Base Case	<100	156.65
	Multiple P1 and P7 contingencies	<100	244.33
Amargosa transformer, Amargosa-Sandy 138kV and Sandy-Gamebird 138kV lines	Trout Canyon-Sloan Canyon 230kV Nos 1 & 2 lines	168.43	341.24
	Sloan-Mead 230kV line	<100	176.92
Innovation-Desert View 230kV No.1	Base Case	<100	174.58
	Innovation-Desert View 230kV No.2 line	107.89	229.32
	Sloan-Mead 230kV line	<100	136.1
	Trout Canyon-Sloan Canyon 230kV No.1 or 2 line	<100	136.73
	Trout Canyon-Sloan Canyon 230kV Nos 1 & 2 lines	126.25	236.71
Pahrump-Vista 138kV	Lathrop-Jackass Flat 138kV line	119.19	606.71
	Base Case	<100	468.14
Lathrop-Jackass Flat 138kV	Pahrump-Vista 138kV line	118.42	606.71
Valley-Vista 138kV	Lathrop-Jackass Flat 138kV line	116.77	506.43
Jackass Flat-Mercury SW 138kV	Trout Canyon-Sloan Canyon 230kV Nos 1 & 2 lines	133.49	482.66
Innovation-Mercury SW 138kV	Pahrump-Vista 138kV line	101.69	551.64
Innovation 230/138kV Transformer	Pahrump-Vista 138kV line	102.05	469.36
VEA 138kV lines	Base Case	<100	468.14
Innovation-Desert View 230kV No.2	Base Case	<100	117.2
	Innovation-Desert View 230kV No.1	<100	133.48
	Trout Canyon-Sloan Canyon 230kV Nos. 1&2	<100	169.02
Sloan-Mead 230kV	Base Case	<100	122.66
	Eldorado-McCullough 500kV line	<100	112.53
	Eldorado 500/230kV 5AA transformer	<100	136.4
	Sloan Canyon-Eldorado 500kV line	<100	117.87
	Innovation-Desert View 230kV No.1 or No.2	<100	108.45
Pahrump 230/138kV No.1 and No.2	Base Case	<100	122.19
Gamebird 230/138kV Transformer	Base Case	<100	109.73
Eldorado-McCullough 500kV	Eldorado-Lugo 500kV line	<100	124.54
	Lugo-Mohave 500kV line	<100	103.9
Eldorado 500/230kV 5AA	Sloan-Mead 230kV line	<100	100.91

Off-Peak EOP Study Area Mitigation Alternatives

- The deliverability constraints identified in off-peak study were already identified in on-peak study. The mitigation alternatives discussed above for on-peak scenarios will also address off-peak constraints.

- In addition, battery charging could also help reduce some of the constraints

Preliminary results for SDG&E area

Portfolio resources expected to impact SDGE area

RESOLVE Resource Name	Resource Type	FCDS			Total (FCDS+EO)		
		Base	Sensitivity	Change	Base	Sensitivity	Change
Arizona_Li_Battery	Li_Battery	759	1,798	1,039	759	1,798	1,039
Arizona_Solar	Solar	600	634	34	1,881	3,226	1,345
Baja_California_Wind	Wind	600	600	-	600	600	-
Greater_Imperial_Geothermal	Geothermal	600	900	300	600	900	300
Imperial_Li_Battery	Li_Battery	10	375	365	10	375	365
Imperial_Solar	Solar	100	100	-	300	653	353
San_Diego_Li_Battery	Li_Battery	749	1,104	355	749	1,104	355
San_Diego_Pumped_Storage	LDES	500	500	-	500	500	-
	Total	**3918**	**6011**	**2093**	**5399**	**9156**	**3757**

On-peak San Diego study area deliverability constraints – East of Miguel

Constraint Grouping	Overloaded Facility	Contingency	Highest Loading (%) (HSN)	
			Base	Sensitivity
Sycamore-Suncrest	Sycamore-Suncrest 230 kV #1	Multiple P1 and P7 contingencies	108.87	133.37
	Sycamore-Suncrest 230 kV #2		108.85	133.35
Miguel banks	Miguel 500/230 kV #1	Multiple P1 and P7 contingencies	115.67	143.54
	Miguel 500/230 kV #2		113.5	140.87
ECO-Miguel	ECO-Miguel 500 kV	Multiple P1 and P7 contingencies	< 100	114.28

On-peak San Diego study area deliverability constraints – BB-SG, EA-SLR, SX

Constraint Grouping	Overloaded Facility	Contingency	Highest Loading (%) (HSN)	
			Base	Sensitivity
Bay Boulevard-Silvergate	Bay Boulevard-Silvergate 230 kV	Base Case	< 100	107.4
		Multiple P1 and P7 contingencies	130.45	146.11
Encina-San Luis Rey	Encina Tap-San Luis Rey 230 kV	Multiple P1 and P7 contingencies	163.02	151.14
	Encina-San Luis Rey 230 kV		141.86	129.73
	Mission-San Luis Rey 230 kV #1		128.73	118.95
	Mission-San Luis Rey 230 kV #2		128.7	117.72
	Escondido-Talega Tap 230 kV		105.02	100.74
	Escondido-San Marcos 69 kV		104.72	104.66
Sycamore	Sycamore-Chicarita 138 kV	Multiple P1 and P7 contingencies	132.93	153.88
	Sycamore-Scripps 69 kV	P1 contingency	< 100	116.47
	Sycamore-Artesian 230 kV	P1 contingency	< 100	101.42
	Sycamore-Penasquitos 230 kV	Base Case	< 100	102.89
		Multiple P1 and P7 contingencies	114.64	127.95

On-peak San Diego study area deliverability constraints – SLR-SO, SG-OT, FR-DT, SM-MT

Overloaded Facility		Contingency	Highest Loading (%) (HSN)	
			Base	Sensitivity
San Luis Rey-San Onofre	San Luis Rey-San Onofre 230 kV #1	San Luis Rey-San Onofre 230 kV #2 and #3	160.55	148.02
		Multiple P1 contingencies	103.97	< 100
Silvergate-Old Town	Silvergate-Old Town 230 kV	Multiple P1 and P7 contingencies	152.22	161.22
	Silvergate-Old Town Tap 230 kV		149.83	159.1
Friars-Doublet Tap	Friars-Doublet Tap 138 kV	P7: Penasquitos-Old Town 230 kV and Sycamore-Penasquitos 230 kV	156.44	174.69
	Multiple other 138 kV and 69 kV lines		114.83	126.49
San Marcos-Melrose Tap	San Marcos-Melrose Tap 69 kV	Multiple P1 and P7 contingencies	194.76	173.19

On-peak San Diego study area deliverability constraints – Base Portfolio overloads

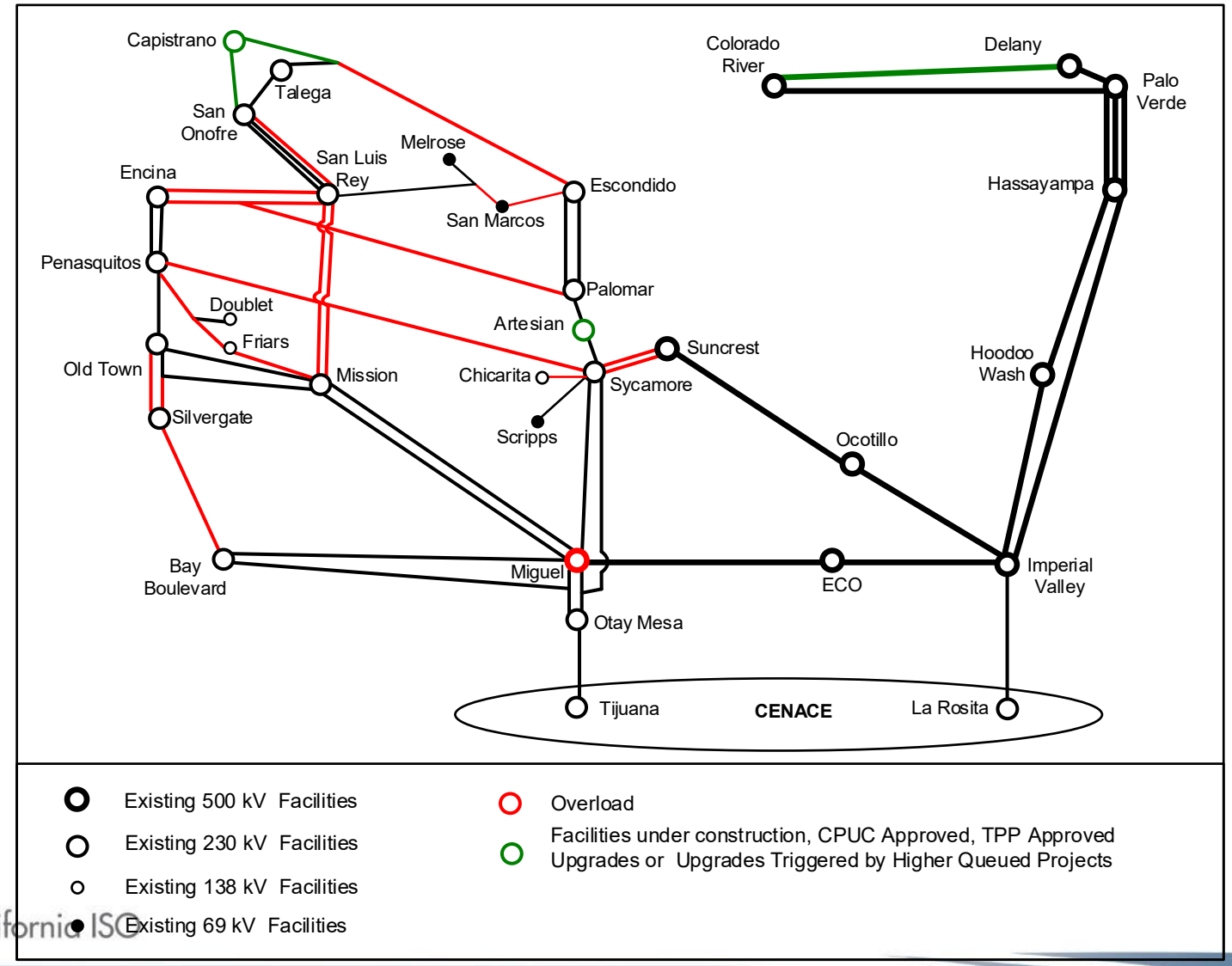

On-peak San Diego study area deliverability constraints – Sensitivity Portfolio overloads

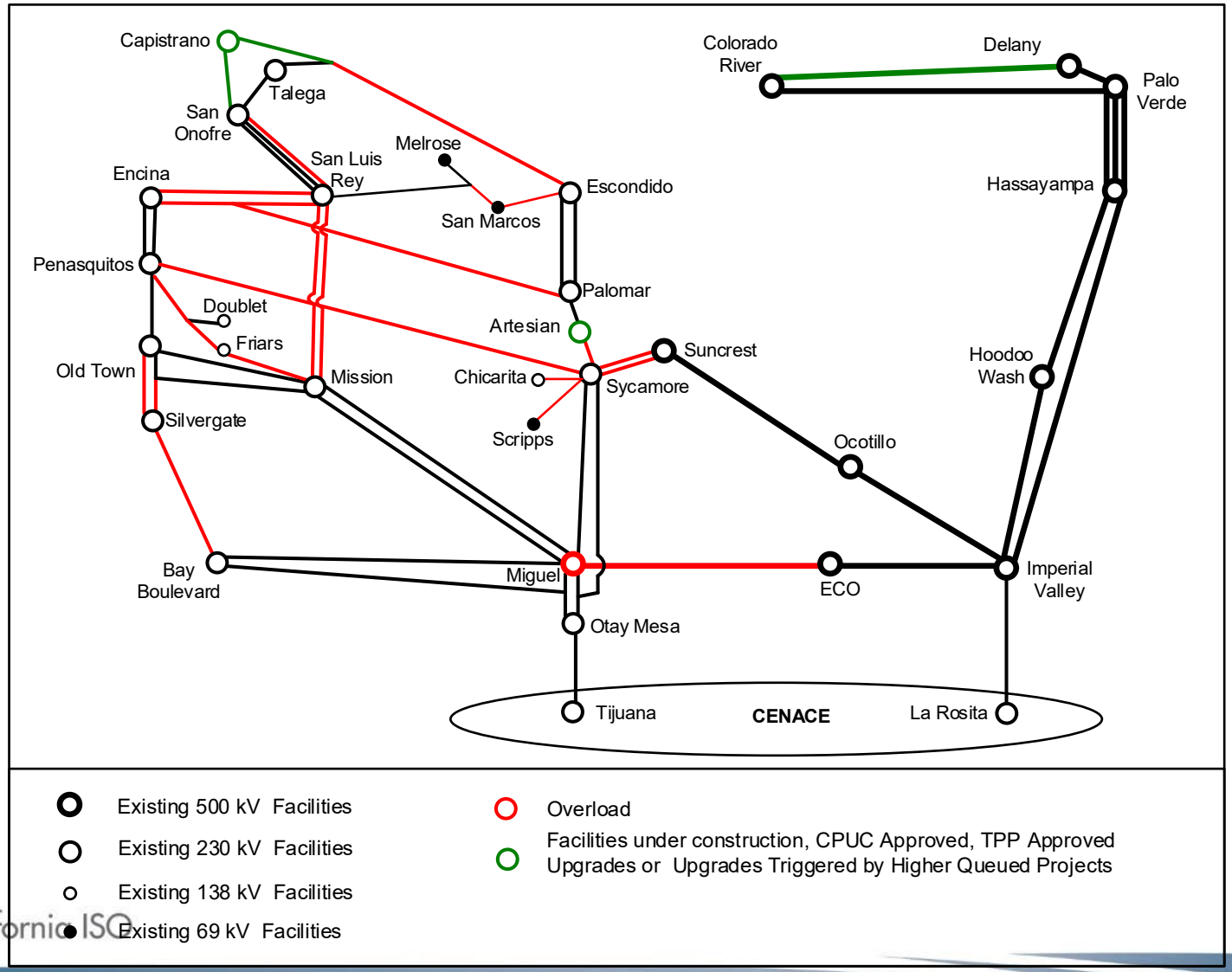

On-peak San Diego study area – overview of considered transmission alternatives

Description	Cost $M
SDGE BES Project Part 1: Proposed projects in Suncrest/Miguel area - loop TL23021 SX-ML into Suncrest, add new 500/230kV bank at Miguel and Suncrest	$275-375
SDGE BES Project Part 2: Old Town/Silvergate area - rebuild TL13822 Mission-Carlton Hills for a double 230 kV for looping TL23041 OM-ML-SX into Mission (Sycamore-San Luis Rey and Miguel-Mission #3). Reconductor TL23022 (ML-MS) and TL23023 (ML-MS) and TL23001 (SLR-MS) and TL23004 (SLR-MS). Install 2 phase shifter transformers at Mission	$620-750
SDGE BES Project Part 3: Proposed projects in the San Luis Rey/San Onofre area - upgrade TL23006 SLR-SO to form new SLR-SO 230 kV #4 line	$110-150
SDGE BES Project Part 4: Old Town 230 kV rearrangement - loop TL23028 SG-OT into Mission, tap TL23029 SG-OT on TL23013 OT-PQ	$1-2
SDGE Project Rearrange TL23013 PQ-OT and TL6959 PQ-Mira Sorrento (removes P7 PQ-OT + SX-PQ contingency)	$19-21
reconductor TL680C San Marcos-Melrose Tap 69 kV	$28
new IV-Serrano 500 kV line	$3237
new IV-N Gila #2 500 kV line	$300

On-peak San Diego study area – overview of considered transmission alternatives

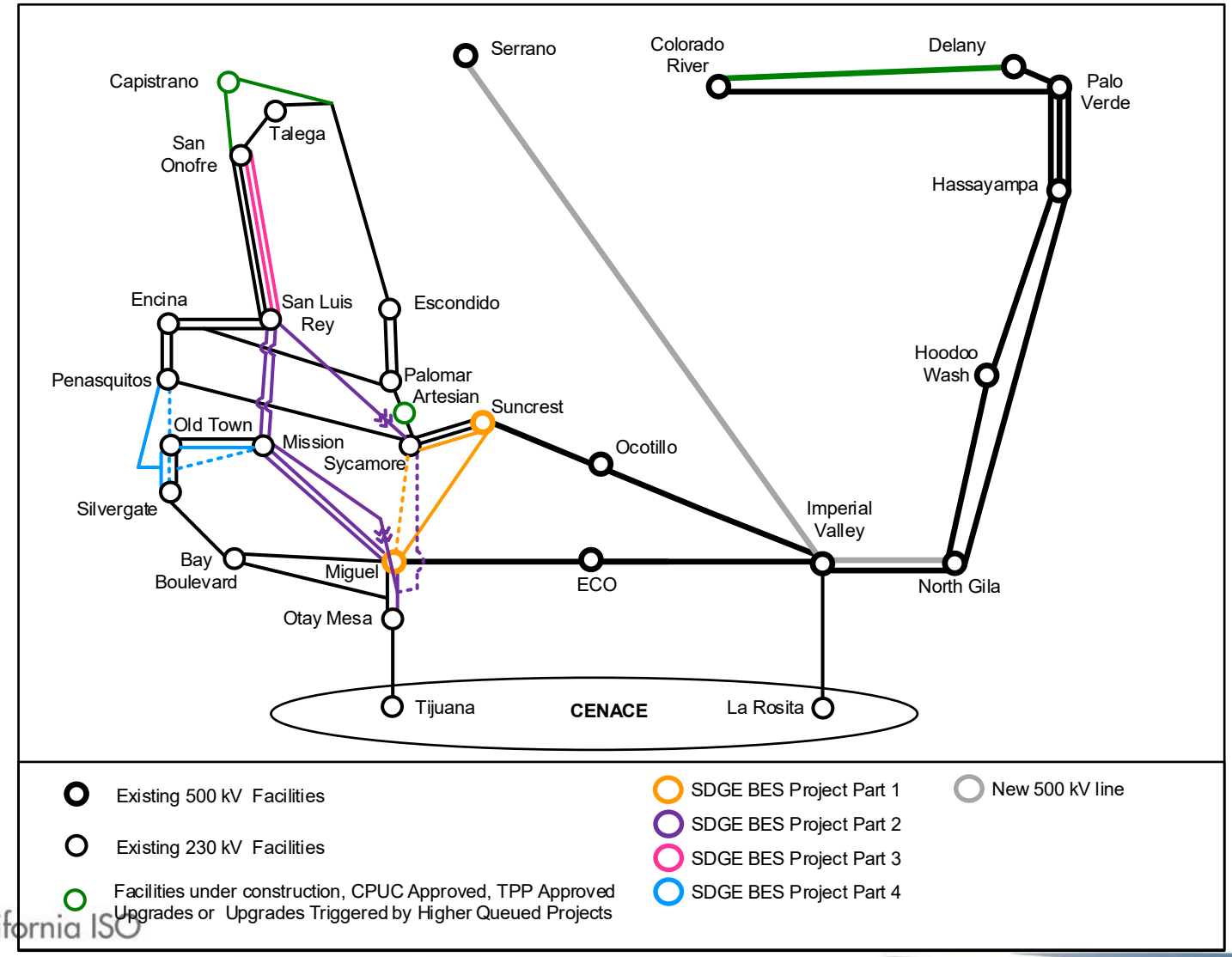

On-peak San Diego study area – Peak Mitigation Option 1: BES 1-3

Description	Cost $M	Needed in Base	Needed in Sensitivity
SDGE BES Project Part 1: Proposed projects in Suncrest/Miguel area - loop TL23021 SX-ML into Suncrest, add new 500/230kV bank at Miguel and Suncrest	$275-375	X	X
SDGE BES Project Part 2: Old Town/Silvergate area - rebuild TL13822 Mission-Carlton Hills for a double 230 kV for looping TL23041 OM-ML-SX into Mission (Sycamore-San Luis Rey and Miguel-Mission #3). Reconductor TL23022 (ML-MS) and TL23023 (ML-MS) and TL23001 (SLR-MS) and TL23004 (SLR-MS). Install 2 phase shifter transformers at Mission	$620-750	X	X
SDGE BES Project Part 3: Proposed projects in the San Luis Rey/San Onofre area - upgrade TL23006 SLR-SO to form new SLR-SO 230 kV #4 line	$110-150	X	X
SDGE Project Rearrange TL23013 PQ-OT and TL6959 PQ-Mira Sorrento (removes P7 contingency)	$19-21	X	X
reconductor TL680C San Marcos-Melrose Tap	$28	X	X
Use 2 hour emergency rating for Silvergate-Bay Boulevard 230 kV line		X	X
Use 30 min emergency rating for Silvergate-Old Town and Silvergate-Old Town Tap 230 kV lines		X	X
Use 30 min emergency rating for Encina Tap-San Luis Rey 230 kV line		X	X
CEC RAS, under construction. Trip gen at Encina for P1 outages of Encina-San Luis Rey 230 kV or Encina-San Luis Rey-Palomar 230 kV		X	X
Silvergate RAS, proposed in GIP. Trip gen at Silvergate for P7 outage of Silvergate-Old Town-Mission and Old Town-Mission 230 kV and P7 outage of Silvergate-Old Town-Mission and Silvergate-Old Town 230 kV		X	X
Mitigate overload on Sycamore-Chicarita 138 kV (NEED COST)	$XX		X
Mitigate overload on ECO-Miguel 500 kV (NEED COST)	$XX		X
Mitigate overload on Bay Boulevard-Silvergate kV (NEED COST)	$XX		X
	Total	$1324	$1324+XX

On-peak San Diego study area – Peak Mitigation Option 2: BES 1-4

Description	Cost $M	Needed in Base	Needed in Sensitivity
SDGE BES Project Part 1: Proposed projects in Suncrest/Miguel area - loop TL23021 SX-ML into Suncrest, add new 500/230kV bank at Miguel and Suncrest	$275-375	X	X
SDGE BES Project Part 2: Old Town/Silvergate area - rebuild TL13822 Mission-Carlton Hills for a double 230 kV for looping TL23041 OM-ML-SX into Mission (Sycamore-San Luis Rey and Miguel-Mission #3). Reconductor TL23022 (ML-MS) and TL23023 (ML-MS) and TL23001 (SLR-MS) and TL23004 (SLR-MS). Install 2 phase shifter transformers at Mission	$620-750	X	X
SDGE BES Project Part 3: Proposed projects in the San Luis Rey/San Onofre area - upgrade TL23006 SLR-SO to form new SLR-SO 230 kV #4 line	$110-150	X	X
SDGE BES Project Part 4: Old Town 230 kV rearrangement - loop TL23028 SG-OT into Mission, tap TL23029 SG-OT on TL23013 OT-PQ	$1-2	X	X
reconductor TL680C San Marcos-Melrose Tap	$28	X	
Use 2 hour emergency rating for Silvergate-Bay Boulevard 230 kV line		X	X
Use 30 min emergency rating for Silvergate-Old Town and Silvergate-Old Town Tap 230 kV lines		X	X
Use 30 min emergency rating for Encina Tap-San Luis Rey 230 kV line		X	X
CEC RAS, under construction. Trip gen at Encina for P1 outages of Encina-San Luis Rey 230 kV or Encina-San Luis Rey-Palomar 230 kV		X	X
Mitigate overload on Old Town Tap-Penasquitos 230 kV (NEED COST)	$XX	X	X
Mitigate overload on Sycamore-Chicarita 138 kV (NEED COST)	$XX		X
Mitigate overload on ECO-Miguel 500 kV (NEED COST)	$XX		X
Mitigate overload on Bay Boulevard-Silvergate kV (NEED COST)	$XX		X
	Total	$1305+XX	$1298+XX

On-peak San Diego study area – Peak Mitigation Option 3: IV-Serrano (no SC)

Description	Cost $M	Needed in Base	Needed in Sensitivity
new IV-Serrano 500 kV line	$3237	X	X
SDGE BES Project Part 1: Proposed projects in Suncrest/Miguel area - loop TL23021 SX-ML into Suncrest, add new 500/230kV bank at Miguel and Suncrest	$275-375		X
SDGE Project Rearrange TL23013 PQ-OT and TL6959 PQ-Mira Sorrento (removes P7 contingency)	$19-21	X	X
reconductor TL680C San Marcos-Melrose Tap	$28	X	X
Use 2 hour emergency rating for Silvergate-Bay Boulevard 230 kV line		X	X
Use 30 min emergency rating for Silvergate-Old Town and Silvergate-Old Town Tap 230 kV lines		X	X
Use 30 min emergency rating for Encina Tap-San Luis Rey 230 kV line		X	X
Use 30 min emergency rating for San Luis Rey-San Onofre 230 kV #1 line		X	
CEC RAS, under construction. Trip gen at Encina for P1 outages of Encina-San Luis Rey 230 kV or Encina-San Luis Rey-Palomar 230 kV		X	X
CEC RAS, under construction. Trip gen at Encina for P7 outage of San Luis Rey-San Onofre 230 kV #2 and #3		X	
Mitigate overload on Sycamore-Penasquitos 230 kV (NEED COST)	$XX		X
Mitigate overload on Sycamore-Chicarita 138 kV (NEED COST)	$XX		X
Mitigate overload on Sycamore-Scripps 69 kV, or use 174 MVA 30 min rating (NEED COST)	$XX		X
	Total	$3286	$3661+XX

On-peak San Diego study area – Peak Mitigation Option 4: IV-Serrano with 70% SC

by-pass HW-NG & HA-NG SC

Description	Cost $M	Needed in Base	Needed in Sensitivity
new IV-Serrano 500 kV line (70% SC)	$3237	X	X
new IV-N Gila #2 500 kV line	$300		X
SDGE Project Rearrange TL23013 PQ-OT and TL6959 PQ-Mira Sorrento (removes P7 contingency)	$19-21		X
reconductor TL680C SM-Melrose Tap	$28	X	X
Use 2 hour emergency rating for Silvergate-Bay Boulevard 230 kV line			X
Use 30 min emergency rating for Silvergate-Old Town and Silvergate-Old Town Tap 230 kV lines		X	X
Use 30 min emergency rating for Encina Tap-San Luis Rey 230 kV line		X	
existing Miguel banks RAS			X
Mitigate overload on Sycamore-Penasquitos 230 kV (NEED COST)			X
Mitigate overload on Sycamore-Chicarita 138 kV (NEED COST)			X
Mitigate overload on Sycamore-Scripps 69 kV, or use 174 MVA 30 min rating (NEED COST)			X
	Total	$3265	$3586+XX

On-peak San Diego study area – Peak Mitigation Option 5: IV-Serrano with 70% SC & BES Part 1

by-pass HW-NG & HA-NG SC

Description	Cost $M	Needed in Base	Needed in Sensitivity
new IV-Serrano 500 kV line (70% SC)	$3237	X	X
new IV-N Gila #2 500 kV line	$300		X
SDGE BES Project Part 1: Proposed projects in Suncrest/Miguel area - loop TL23021 SX-ML into Suncrest, add new 500/230kV bank at Miguel and Suncrest	$275-375	X	X
SDGE Project Rearrange TL23013 PQ-OT and TL6959 PQ-Mira Sorrento (removes P7 contingency)	$19-21		X
reconductor TL680C SM-Melrose Tap	$28	X	X
Use 2 hour emergency rating for Silvergate-Bay Boulevard 230 kV line		X	X
Use 30 min emergency rating for Silvergate-Old Town and Silvergate-Old Town Tap 230 kV lines		X	X
Use 30 min emergency rating for Encina Tap-San Luis Rey 230 kV line		X	
Mitigate overload on Sycamore-Chicarita 138 kV (NEED COST)			X
	Total	$3640	$3933+XX

On-peak San Diego study area – Peak Mitigation Option 6: IV-Serrano with 70% SC

HW-NG & HA-NG SC in

Description	Cost $M	Needed in Base	Needed in Sensitivity
new IV-Serrano 500 kV line (70% SC)	$3237	X	X
new IV-N Gila #2 500 kV line	$300		X
SDGE Project Rearrange TL23013 PQ-OT and TL6959 PQ-Mira Sorrento (removes P7 contingency)	$19-21		X
reconductor TL680C SM-Melrose Tap	$28	X	X
Use 2 hour emergency rating for Silvergate-Bay Boulevard 230 kV line			X
Use 30 min emergency rating for Silvergate-Old Town and Silvergate-Old Town Tap 230 kV lines		X	X
Use 30 min emergency rating for Encina Tap-San Luis Rey 230 kV line		X	
existing Miguel banks RAS			X
Mitigate overload on Sycamore-Penasquitos 230 kV (NEED COST)			X
Mitigate overload on Sycamore-Chicarita 138 kV (NEED COST)			X
Mitigate overload on Sycamore-Scripps 69 kV, or use 174 MVA 30 min rating (NEED COST)			X
Mitigate overload on HA-HW 500 kV (NEED COST)			X
Mitigate overload on HA-NG 500 kV (NEED COST)			X
Mitigate overload on HW-NG 500 kV (NEED COST)			X
Mitigate overload on HW-NG SC, or use 30 min rating (NEED COST)		X	X
Mitigate overload on HW-NG 500 kV (NEED COST)			X
Mitigate overload on IV-NG #1 (NEED COST)			X
Mitigate overload on IV-NG #2 (NEED COST)			X
	Total	$3265+XX	$3933+XX

Off-peak San Diego study area deliverability constraints

Constraint Grouping	Overloaded Facility	Contingency	Highest Loading (%)	
			Base	Sensitivity
Sycamore-Suncrest	Sycamore-Suncrest 230 kV #1	Multiple P1 and P7 contingencies	101.03	124.35
	Sycamore-Suncrest 230 kV #2		101.02	124.39
Miguel banks	Miguel 500/230 kV #1	Multiple P1 and P7 contingencies	111.24	133.97
	Miguel 500/230 kV #2		108.16	130.46
ECO-Miguel	ECO-Miguel 500 kV	Multiple P1 and P7 contingencies	< 100	105.59

Off-peak constraints have also been identified in the peak study, and flows are higher in the peak study.

Proposed mitigation for peak constraints is expected to also mitigate off-peak constraints.

Summary

- The transmission constraints in the SDG&E and SCE Eastern area affect generation in both areas
- Mitigation options between these two areas have been coordinated but further coordination is needed
- These mitigation options also need to be further coordinated with the long-term deliverability and reliability needs in the load centers

Preliminary results for PG&E area

Overview of portfolio resources likely to impact PG&E area

RESOLVE Resource Name	Resource Type	FCDS			Total (FCDS+EO)		
		Base	Sensitivity	Change	Base	Sensitivity	Change
Carrizo_Wind	Wind	188	188	-	188	188	-
Central_Valley_North_Los_Banos_Wind	Wind	186	186	-	186	186	-
Distributed Solar	Solar	115	115	-	115	115	-
Humboldt_Bay_Offshore_Wind	Offshore Wind	-	1,487	1,487	120	1,607	1,487
InState Biomass	Biomass/Biogas	115	115	-	115	115	-
Kern_Greater_Carrizo_Wind	Wind	60	60	-	60	60	-
Morro_Bay_Offshore_Wind	Offshore Wind	1,588	3,100	1,512	1,588	3,100	1,512
Northern_California_Li_Battery	Li_Battery	200	1,791	1,591	200	1,791	1,591
Northern_California_Solar	Solar	-	344	344	-	1,856	1,856
Northern_California_Wind	Wind	305	305	-	656	656	-
Solano_Geothermal	Geothermal	79	79	-	79	79	-
Solano_Wind	Wind	192	241	49	340	437	97
Southern_PGAE_Li_Battery	Li_Battery	1,107	5,556	4,450	1,107	5,556	4,450
Southern_PGAE_Solar	Solar	140	2,653	2,513	1,817	9,989	8,172
	Total	**4,275**	**16,220**	**11,946**	**6,571**	**25,734**	**19,164**

On-Peak constraints Base and Sensitivity (GBA)

Overloaded Facility	Contingency	Scenario	Loading		Potential Mitigation
			BASE	SENS-01	
Collinsville – Pittsburg E 230 kV Line	COLLNSVL-PITSBG F #1 230k	HSN	106	138	Series compensation on Collinsville-Pittsburg 230 kV lines as part of the Collinsville project ultimate plan.
North Dublin-Cayetano 230kV Cable	Contra Costa-Morago #1 and #2 230kV lines	HSN	106	112	Series compensation on Contra Costa-Newark 230 kV path.

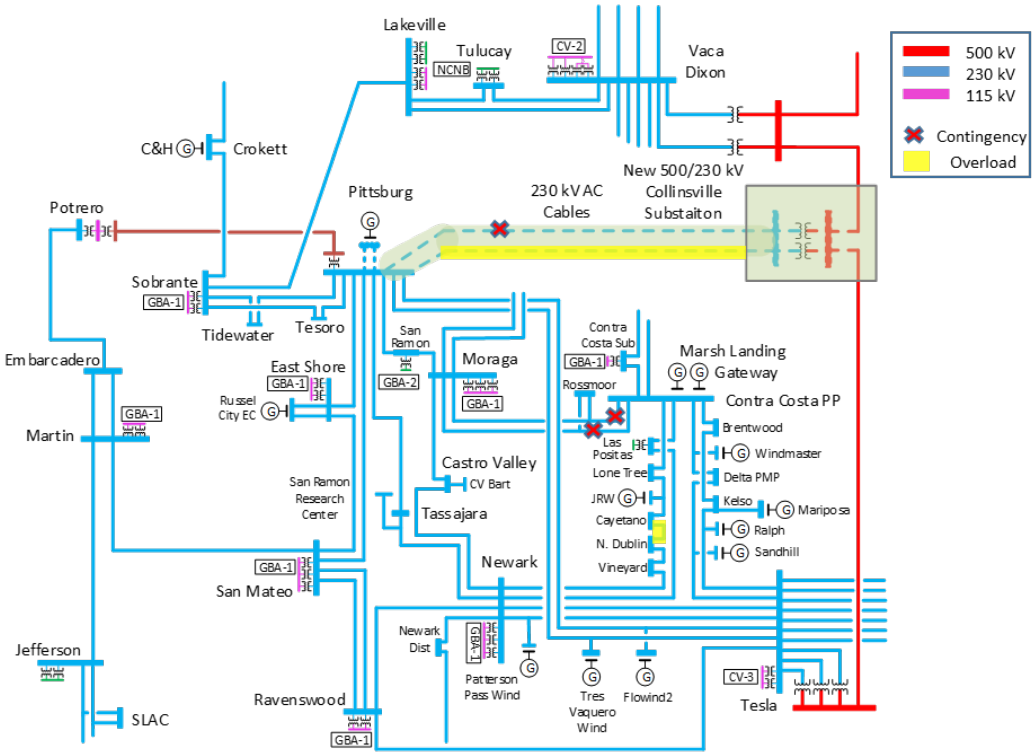

On-Peak constraints Base and Sensitivity (NGBA)

Overloaded Facility	Contingency	Scenario	Loading		Potential Mitigation
			BASE	SENS-01	
Cloverdale – Eagle Rock 115 kV	GEYSERS #3-EAGLE ROCK & GEYSERS #7-EAGLE ROCK LINES	HSN	125	120	Relocate Policy Generation
Eagle Rock- Fulton- Silverado 115 kv (Eagle rock sub to Ricon Jct Jct2 115 kV)	VACA- LAKEVILLE #1 & TULUCAY - VACA 230 KV	HSN	105	<100%	Reconductor

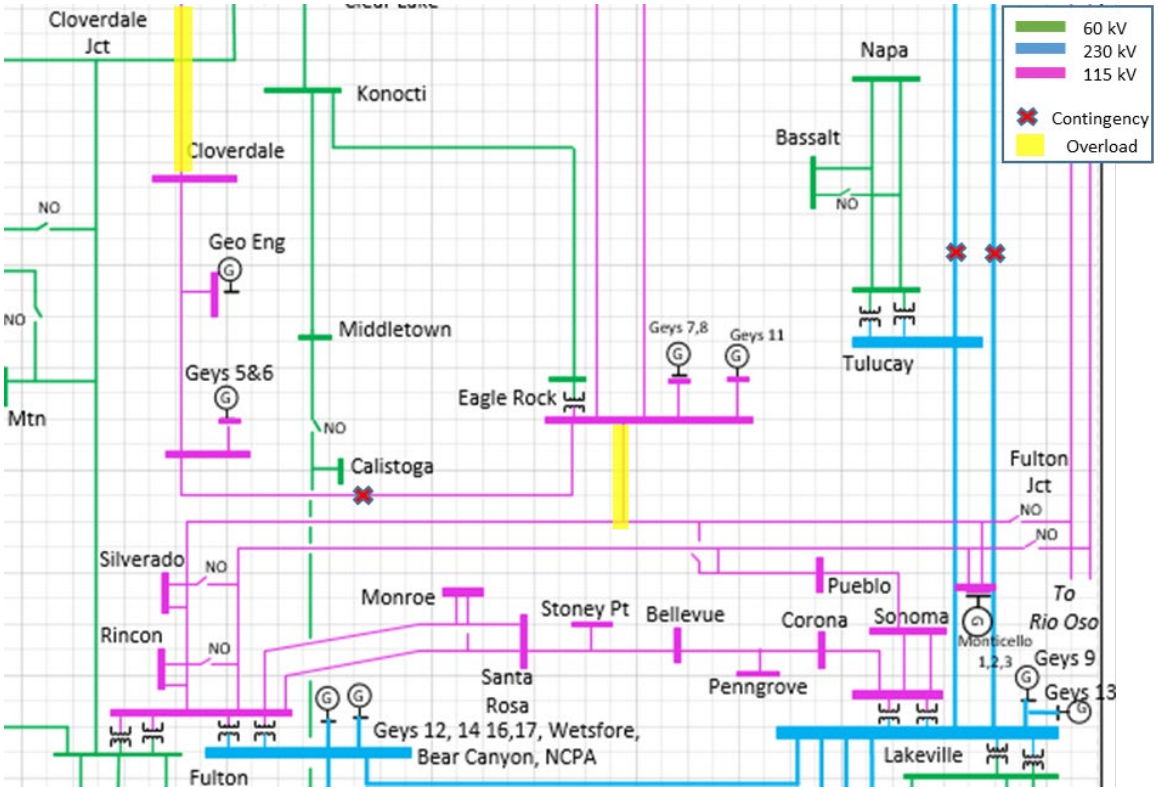

On-Peak constraints Base and Sensitivity (NGBA)

Overloaded Facility	Contingency	Scenario	Loading		Potential Mitigation
			BASE	SENS-01	
Humboldt Bay Area 60 kV	Basecase	HSN	117	154	Reconductor and control points (Reliability project under review)
Drum – Higgins 115 kV	Basecase	HSN	114	187	Replace limiting equipment to return rating to 125
Cortina No. 4 60 kV Line	Basecase	HSN	120	<100%	Move Generation to Delevan 230 per Sensitivity Study

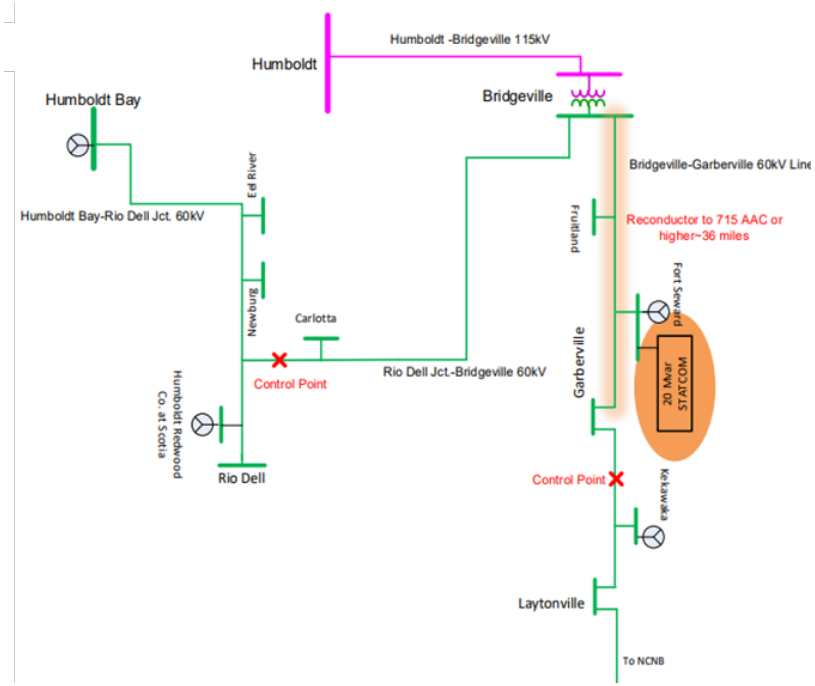

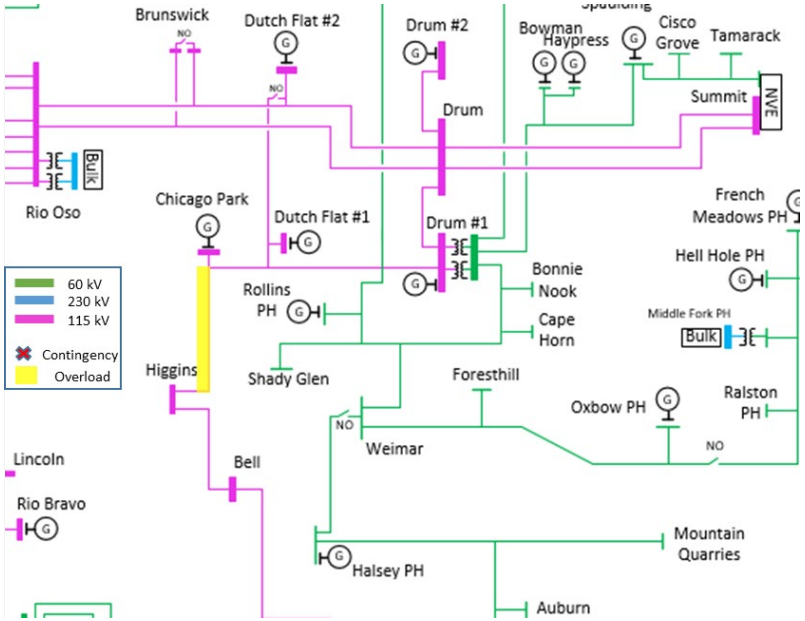

On-Peak constraints Base and Sensitivity (South PG&E)

Overloaded Facility	Contingency	Scenario	Loading		Potential Mitigation
			BASE	SENS-01	
Borden - Storey #1/#2 230 kV line	BORDEN - STOREY #1/#2 230 kV	HSN	112	150	Series compensation on Borden-Gregg or reconductor
Wheeler 115/70 kV bank 2	Basecase	HSN	123	225	Relocate Policy Generation
Arco-Cholame 70 kV Line	Basecase	HSN	121	<100%	Relocate Policy Generation
Henrietta 230/115 kV Bank	HELM-MCCALL 230KV & HENTAP2-MUSTANGSS #1 230KV	HSN	103	111	Henrietta Bank 3 Replacement

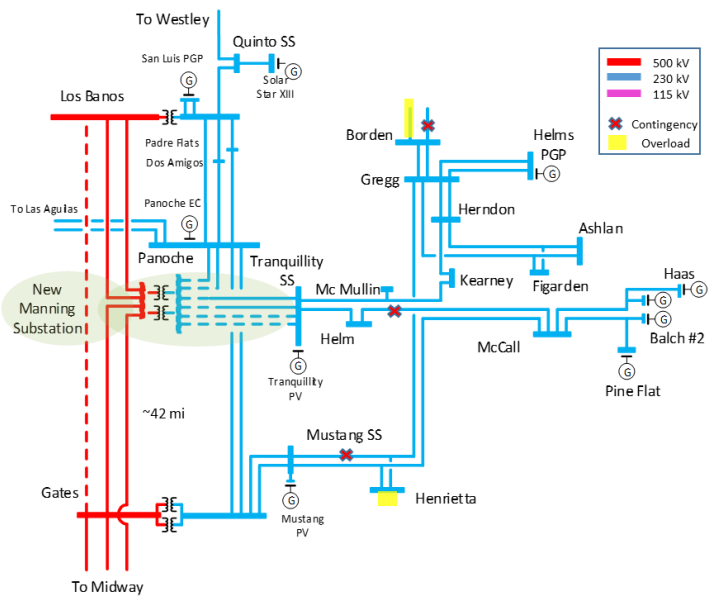

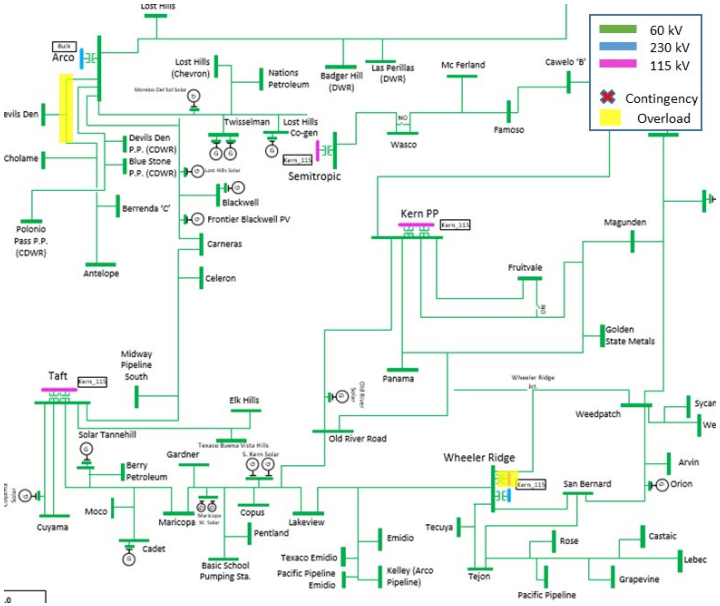

California ISO

On-Peak constraints - Sensitivity Only (Bulk and GBA)

Overloaded Facility	Contingency	Scenario	Loading		Potential Mitigation
			BASE	SENS-01	
Table Mountain – Vaca Dixon 500 kV line	Basecase	HSN	<100%	120	Overload dependent on Alternative to interconnect offshore
Round Mountain – Cottonwood 230 kV line	TABLE MTN-VACA 500KV	HSN	<100%	109	
Collinsville – Pittsburgh 1230 kV line	Basecase	HSN	<100%	123	Series compensation on Collinsville-Pittsburg 230 kV lines as part of the Collinsville project ultimate plan.
East Shore – San Mateo 230 kV line	Newark-Ravenswood 230 kV and Tesla-Ravenswood 230 kV lines	HSN	<100%	120	
North Dublin – Vineyard 230 kV line	Contra Costa-Moraga Nos. 1 & 2 230 kV lines	HSN	<100%	103	Series compensation on Contra Costa-Newark 230 kV path.

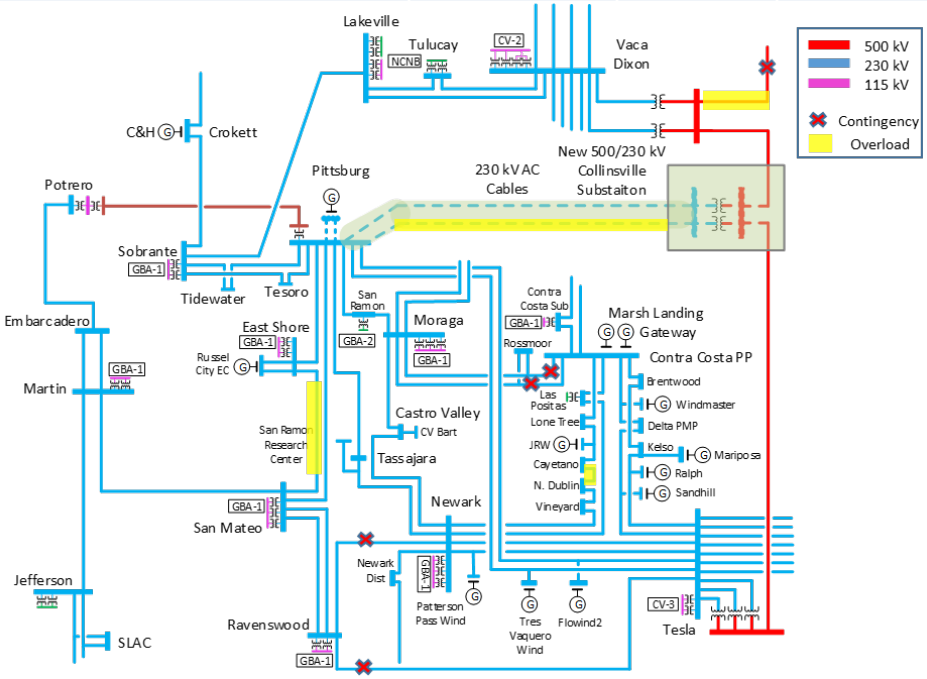

California ISO

On-Peak constraints - Sensitivity Only (NGBA)

Overloaded Facility	Contingency	Scenario	Loading		Potential Mitigation
			BASE	SENS-01	
Lincoln - Pleasant Grove 115 kV Line	Rio Oso-Atlantic 230 kV Line & Rio Oso-Gold Hill 230 kV Line	HSN	<100%	106	Possible RAS or Reconductor
Stanislaus-Melones-Manteca 115 kV Line No. 1	STANISLAUS-MANTECA #2 115KV &STANISLAUS-MELONES SW STA-RIVERBANK JCT SW STA 115KV	HSN	<100%	107	Reconductor

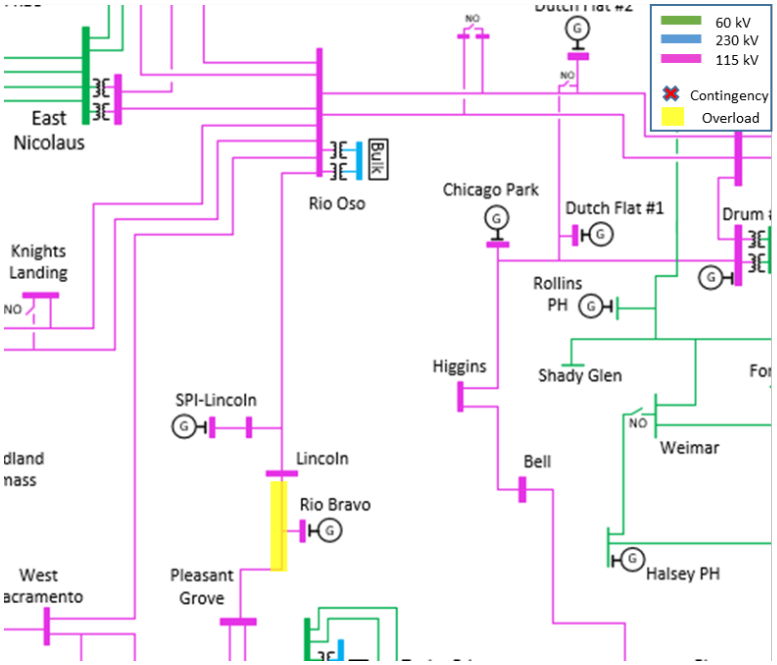

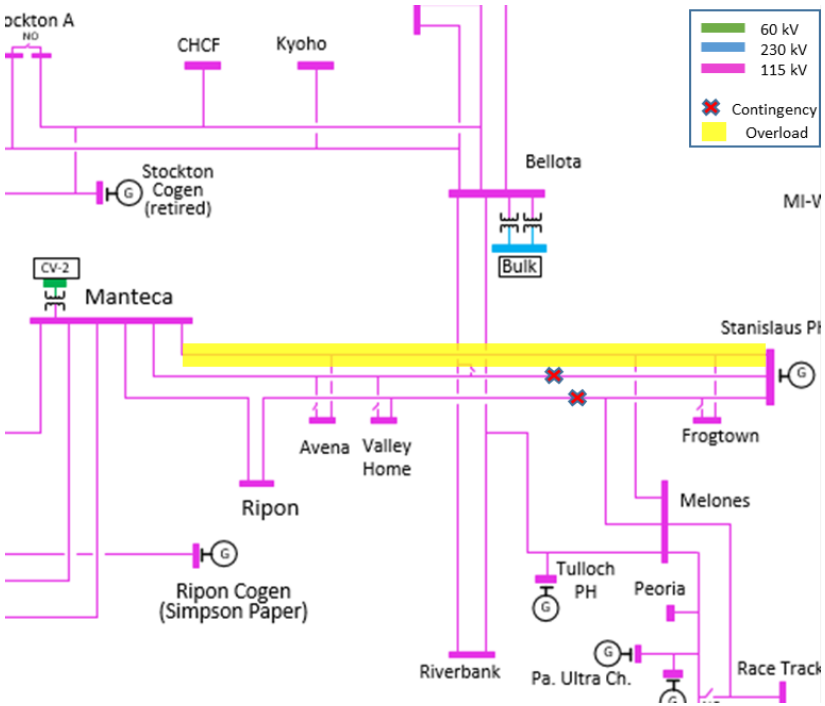

On-Peak constraints - Sensitivity Only (South PG&E)

Overloaded Facility	Contingency	Scenario	Loading		Potential Mitigation
			BASE	SENS-01	
Las Aguilas – Moss Landing 230 kV	MOSS LANDING-LOS BANOS 500KV	HSN	<100%	105	Reevaluate previously approved series reactor on the Moss Landing – Las Aguilas 230 kV line
McCall 115/230 kV Bank 1	McCall 115/230 kV Bank 3	HSN	<100%	102	RAS or Bank replacement
Gates-Gregg 230 kV Line	HELMS-GREGG #1 230KV & HELMS-GREGG #2 230KV	HSN	<100%	103	Reconductor
Melones – Cottle 230 kV line	Basecase	HSN	<100%	102	Reconductor
Barton-Airways-Sanger 115 kV Line	HENTAP1-MUSTANGSS #1 230KV & TRANQLTYSS-MCMULLN1 #1 230KV	HSN	<100%	109	Reconductor
Herndon – Woodward 115 kV Line	HERNDON-BARTON 115KV & HERNDON-MANCHESTER 115KV	HSN	<100%	114	Reconductor
GWF-Kingsburg 115 kV Line	Basecase	HSN	<100%	117	Reconductor

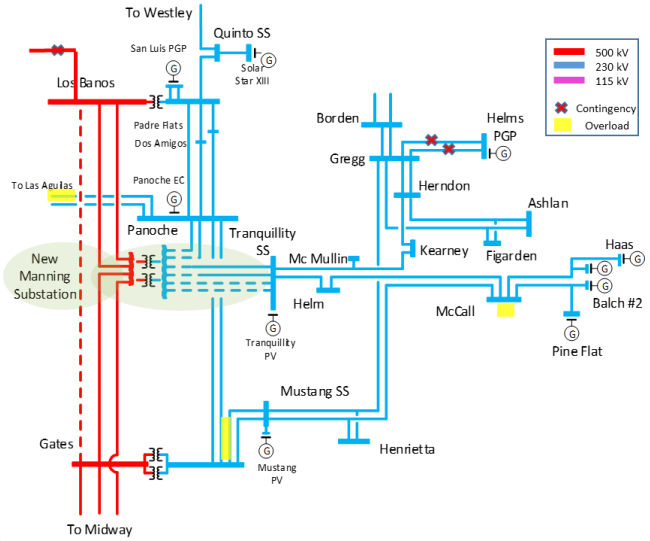

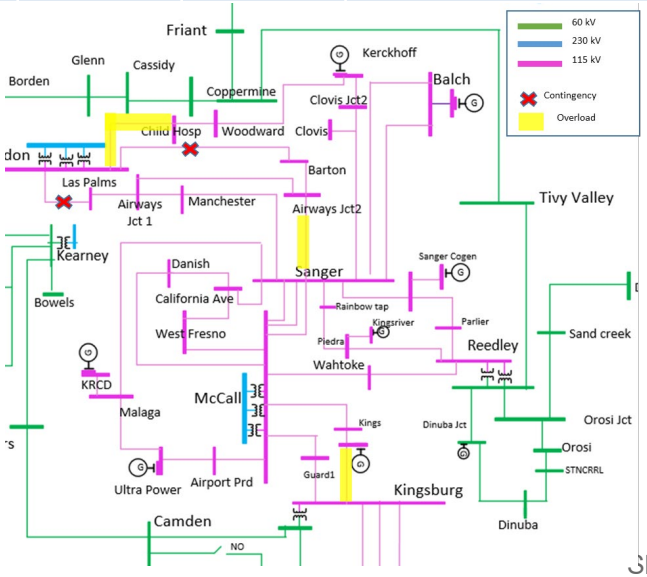

California ISO

On-Peak constraints - Sensitivity Only (South PG&E)

Overloaded Facility	Contingency	Scenario	Loading		Potential Mitigation
			BASE	SENS-01	
Semitropic-Famoso 115 kV Line	MIDWAY-KERN NO. 1 & MIDWAY-KERN NO. 4 230 KV LINES	HSN	<100%	121	Reconductor
Corcoran-Smyrna (Alpaugh-Smyrna) 115 kV Line	Basecase	HSN	<100%	132	Reconductor
Temblor-San Luis Obispo 115 kV Line	Morro Bay-Mesa and Morro Bay-Diablo 230 kV Lines	HSN	<100%	111	Reconductor
Semitropic-Wasco 70 kV Line	MIDWAY-KERN NO. 1 & MIDWAY-KERN NO. 4 230 KV LINES	HSN	<100%	106	Reconductor
Temblor-PSE MCKJ 115 kV Line	Morro Bay-Mesa and Morro Bay-Diablo 230 kV Lines	HSN	<100%	102	Reconductor

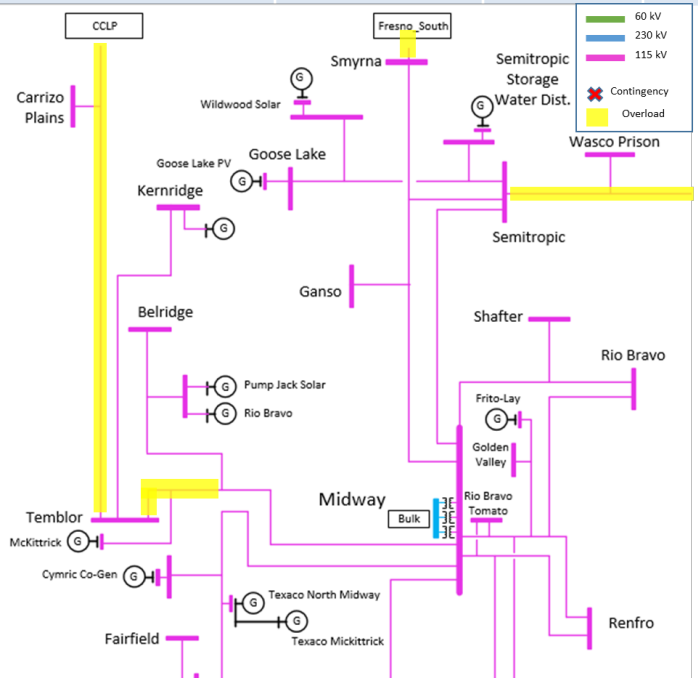

Off-Peak constraints – Baseline
(Constraints mitigated by storage in charging mode)

Overloaded Facility	Contingency	Area	Loading		Potential Mitigation
			BASE	SENS-01	
Kern-Tevis-Stockdale #1/#2 115kV	Kern-Tevis-Stockdale #1/#2 115kV	South PG&E	138	220	57MW generic BESS will eliminate overload
Kettlemen – Gates 70 kV	Basecase	South PG&E	103	<100%	2MW generic BESS will eliminate overload
Warnerville – Willison	BELLOTA-COTTLE 230KV	South PG&E	175	151	80MW generic BESS will eliminate overload
Los Banos 500 kV	Los Banos – Manning 500 kV	South PG&E	132	191	673MW generic BESS will eliminate overload

Off-Peak constraints – Sensitivity Only

(Constraints mitigated by storage in charging mode)

Overloaded Facility	Contingency	Area	Loading		Potential Mitigation
			BASE	SENS-01	
Midway-Gates 500 kV	MANNING-MIDWAY 500KV	Bulk	<100%	128	1457 generic BESS will eliminate overload
MOSS LANDING - LOSBANOS 500 kV line	TESLA-LOS BANOS #1 500KV	Bulk	<100%	NConv	4038 generic BESS will eliminate overload
BELRDG J - PUMPJACK_TP 115 kV line	PUMPJACK 115/34.5KV TB 1	South PG&E	<100%	102	26 generic BESS eliminates overload
Borden – Storey 230 kV line	HELMS-GREGG #1 230KV & HELMS-GREGG #2 230KV	South PG&E	<100%	110	1448 MW generic BESS will eliminate overload
C577SS-Los Banos 230 kV Line	MELONES-WILSON 230KV & WARNERVILLE-WILSON 230KV	South PG&E	<100%	139	2109 generic BESS will eliminate overload
Gates-Arco 230kV	MORROBAY-SOLARSS 230 kV Line No. 1 & 2	South PG&E	<100%	130	210 generic BESS eliminates overload
Los Banos-Panoche #2 230 kV Line	DOS AMIGOS PUMPING PLANT-PANOCHE 230KV	South PG&E	<100%	114	445 generic BESS will eliminate overload
Morro Bay 115/230 Bank 6	Morro Bay-Mesa and Diablo-Mesa 230 kV Lines	South PG&E	<100%	113	300 MW generic BESS will eliminate overload
Schindler-Coalinga #2 70 kV Line (Schindler-Paige section)	PANOCHE-SCHINDLER #1 115KV & EXCELSIORSS-PANOCHE2 115KV	South PG&E	<100%	152	59 MW Generic BESS will eliminate overload
Tesla - Westley 230 kV Line	BELLOTA-COTTLE 230KV & BELLOTA-WARNERVILLE 230KV	South PG&E	<100%	123	94.5 generic BESS will eliminate overload
WESTLEY - Q1244SS 230 kV line	HENTAP1-MUSTANGSS #1 230KV & TRANQLTYSS-MCMULLN1 #1 230KV	South PG&E	<100%	155	4777 generic BESS will eliminate overload
Wilson – Dairyland 115 kV line	HENTAP1-MUSTANGSS #1 230KV & TRANQLTYSS-MCMULLN1 #1 230KV	South PG&E	<100%	120	1730 generic BESS eliminates overload

Off-Peak constraints – Sensitivity Only

(Constraints not mitigated by storage in charging mode)

Overloaded Facility	Contingency	Area	Loading		Potential Mitigation
			BASE	SENS-01	
Arco-Midway 230 kV Line	GATES-ARCO & GATES-MIDWAY 230 KV LINES	South PG&E	<100%	153	Reconductor if economic.
Gates-Gregg 230 kV Line	Base Case	South PG&E	<100%	110	Reconductor if economic.
Kern-Tevis-Stockdale #1/#2 115kV	Kern-Tevis-Stockdale #1/#2 115kV	South PG&E	<100%	220	Reconductor if economic.
Los Banos – Gates 500 kV Area	Basecase	South PG&E	<100%	168	Evaluate 500 kV lines series compensations or reconductor if economic.
Panoche 115 kV Area	MANNING-GATES 500KV	South PG&E	<100%	NConv	Increase area export capacity if economic.
Panoche 230 kV Area	MUSTANGSS-GATES #1 230KV & MUSTANGSS-GATES #2 230KV	South PG&E	<100%	146	Increase area export capacity if economic.
Panoche 70 kV Area	PANOCHE-SCHINDLER #1 115KV & EXCELSIORSS-PANOCHE2 115KV	South PG&E	<100%	210	Increase area export capacity if economic.
Warnerville - Wilson 230 kV Line	MELONES-WILSON 230KV & COTTLE-MELONES 230KV	South PG&E	<100%	151	Evaluate existing reactor or reconductor if economic.

Summary of PG&E

- A number of the overloads identified are in very local areas on the 70 kV and 115 kV system
- A number of generators mapped to the lower voltage systems (70 kV and 115 kV) should be considered to be mapped at the high voltage (230 kV)
- In sensitivity study for the Humboldt area offshore wind, the three alternatives identified in the 2021-2022 transmission planning process are being reviewed

Agenda

- Recap of previous presentations
- Summary of portfolios studied
- Preliminary deliverability assessment results
  - SCE/DCRT/GLW/VEA Area
  - SDG&E Area
  - PG&E Area
- **Next steps**

Next steps

- Refine preliminary assessment taking into account stakeholder feedback received
- Perform further evaluation of transmission alternatives to identify the preferred solution including using PCM within the economic assessment as needed.
- Identify policy-driven transmission upgrades for approval by the ISO Board.
- Document the policy-driven assessment results and conclusions in the draft 2022-2023 Transmission Plan

California ISO

Preliminary Economic Assessment Results

Yi Zhang
Sr. Advisor, Transmission Infrastructure Planning

2022-2023 Transmission Planning Process Stakeholder Meeting
November 17, 2022

Outline of the presentation

- PCM development
- Base portfolio PCM preliminary results
- Sensitivity portfolio (30 MMT) PCM preliminary results
- Economic study requests and preliminary high priority study areas

Planning PCM development

California ISO

Update battery replacement cost in planning PCM

- The ISO modeled battery cost to reflect limitations associated with the depth of discharge of battery usage cycles (DoD or cycle depth) and replacement costs associated with the number of cycles and depth of discharge the battery is subjected to.
- In 2021-2022 TPP cycle, the battery's operation cost was modeled as a flat average cost:

$$Average\ Cost = \frac{Per\ unit\ replacement\ cost}{Cycle\ life * DoD * 2}$$

- Parameters were based on DOE/PNNL 2020 report:
  - DoD: 80%
  - Cycle life: 2100
  - Per unit cost: $99,000/MWh (based on 400 MWh battery)
- With the above parameters, the average cost was $29.54/MWh

Parameters for battery cost calculation

- The baseline assumptions for battery parameters in the 2022-2023 planning cycle were based on the 2030 forecast in the updated DOE report prepared by PNNL in 2022 (https://www.pnnl.gov/sites/default/files/media/file/ESGC%20Cost%20Performance%20Report%202022%20PNNL-33283.pdf)

- DOE/PNNL report further clarified the definition of cycle life. Cycle life represents available cycles until remaining energy is equivalent to average DoD
  - E.g. if cycle life is 2100 cycles and average DoD is 80%, the remaining energy is about 80% of the rated energy after 2100 cycles

Updated average cost for battery in 2022-2023 TPP cycle

- The battery average cost equation was modified according to the clarification of the definition of cycle life in the 2022 DOE/PNNL report:

$$Average\ Cost = (1 - DoD) * \frac{Per\ unit\ replacement\ cost}{Cycle\ life * DoD * 2}$$

- Parameters were based on 2022 report:
  - DoD: 80%
  - Cycle life: 2640 cycles
  - Per unit replacement cost: $109,450/MWh (this cost is estimated based on battery with 240 MWh rated energy, the largest size of battery estimated in the report)
- With the above parameters, the average cost is $5.18/MWh.

Two PCM cases in this TPP cycle

- Base PCM
  - CEC 2032 mid-AAEE high electrification load forecast
  - CPUC base portfolio
- Sensitivity PCM
  - CEC 2035 mid-AAEE high electrification load forecast
  - CPUC 30 MMT portfolio

Out of state wind and Offshore wind

- Out-of-state wind
  - NW wind requiring new transmission were modeled at Pinal C 500 kV bus
  - The TransWest Express project was modeled for Wyoming wind
- Offshore wind
  - Humboldt Offshore wind (120 MW) in the base portfolio PCM was modeled at Humboldt 115 kV
  - Incremental Humboldt Offshore wind in the 30 MMT sensitivity portfolio PCM was modeled at the Fern Road 500 kV bus (Round MT-Table MT 500 kV line)
    - Further assessment of alternatives will be undertaken
  - Morro Bay Offshore wind were modeled at the Diablo Canyon 500 kV bus

Base portfolio preliminary results – congestion and curtailment

Congestion aggregated by area

Area	Total Congestion Cost ($M)	Total Congestion Hours (Hrs)
SCE NOL	77.93	5,692
GridLiance/VEA	66.30	4,647
SCE EOL	64.82	2,911
COI Corridor	58.63	1,260
Path 26 Corridor	35.73	1,899
PG&E Panoche/Oro Loma area	32.47	2,256
SDGE San Diego Southern	29.46	2,130
SCE W.LA	27.10	248
PG&E Collinsville-Pittsburg 230 kV	16.62	1,187
PG&E Fresno	13.24	1,163
Path 46 WOR	11.42	150
SDGE/CFE	8.82	1,439
PG&E Mosslanding-Las Aguilas 230 kV	8.21	421
Path 15 Corridor	7.47	235
SCE Antelope 66kV	5.29	1,244
PG&E North Valley	3.75	202
PDCI	1.44	111
SCE J.Hinds-Mirage	1.27	153

Path 26 congestion

Area	Branch Group	Cost_F ($M)	Duration_F (Hrs)	Cost_B ($M)	Duration_B (Hrs)	Total Congestion Cost ($M)	Total Congestion Hours (Hrs)
Path 26 Corridor	Path 26	0.01	11	23.84	1,214	23.85	1,225
Path 26 Corridor	PG&E/SCE Midway-Whirlwind	0.00	4	11.86	667	11.86	671
Path 26 Corridor	PG&E/SCE Midway-Vincent #1	0.02	3	0.00	0	0.02	3

- Cost_F is the congestion cost when the flow is in the forward direction by the line or path definition in the case. Cost_B is the congestion cost when the flow is in the backward direction.
- For Path 26, the forward direction in the case is from north to south.

Path 26 congestion pattern vs SCE battery charging/discharging pattern

	1	2	3	4	5	6	7	8	9	10	11	12	13	14	15	16	17	18	19	20	21	22	23	24
Jan	1	2	3	0	0	0	0	6	27	30	24	21	17	15	17	10	4	8	9	7	5	3	1	1
Feb	0	1	0	0	0	0	0	10	20	15	12	7	7	8	6	7	8	4	12	10	9	5	6	2
Mar	1	1	1	1	0	0	2	24	29	24	19	17	17	17	14	15	9	2	11	13	12	13	4	5
Apr	0	1	0	0	0	0	9	23	21	12	9	9	7	6	5	4	1	0	1	7	8	7	3	0
May	0	0	0	0	0	0	10	4	2	2	2	1	1	0	0	0	0	0	0	6	3	4	1	1
Jun	0	0	0	0	0	0	5	2	2	1	0	0	0	0	2	2	4	5	7	9	7	9	9	5
Jul	0	0	0	0	0	1	4	3	0	1	1	2	1	1	1	3	4	3	8	7	4	3	1	0
Aug	0	0	1	0	0	0	12	16	7	6	4	2	1	2	2	2	3	0	3	2	0	2	0	0
Sep	0	1	1	1	1	0	20	13	18	15	11	12	10	6	5	4	0	7	11	5	4	3	1	1
Oct	1	3	4	2	1	1	6	22	25	19	12	7	6	5	4	2	1	10	8	8	7	5	5	3
Nov	3	4	6	4	3	1	2	24	31	32	24	22	21	21	23	9	14	16	17	14	11	7	7	7
Dec	4	5	5	4	5	1	0	15	26	30	28	18	20	15	13	5	6	9	16	12	10	7	6	5

- Path 26 congestion was observed mainly when the flow was from south to north
- As daytime congestion of Path 26 was largely attributed to solar generation in S. CA, battery discharging contributed to Path 26 congestion in late afternoon and evening

	1	2	3	4	5	6	7	8	9	10	11	12	13	14	15	16	17	18	19	20	21	22	23	24
Jan	0	0	0	0	0	0	0	0	-331	-1,586	-2,211	-2,262	-2,384	-2,455	-1,998	-887	949	2,300	2,482	2,364	1,669	1,010	735	488
Feb	9	7	1	4	0	6	12	-10	-1,761	-4,269	-5,462	-6,186	-6,492	-6,735	-6,554	-4,770	53	4,617	6,975	7,352	6,162	4,529	3,620	2,542
Mar	58	13	4	2	4	14	2	-360	-2,140	-3,342	-4,784	-5,702	-5,995	-6,094	-5,627	-4,126	-1,293	2,184	6,385	7,010	6,647	5,743	3,222	2,256
Apr	213	66	71	55	46	39	-9	-1,419	-3,089	-4,656	-6,079	-6,880	-7,209	-7,141	-6,451	-5,275	-3,106	512	6,797	8,130	8,186	8,769	5,846	4,876
May	202	36	99	26	18	1	-485	-2,784	-3,898	-5,179	-6,270	-6,932	-7,141	-6,998	-6,110	-4,309	-1,974	112	6,028	8,874	8,655	9,230	6,175	4,805
Jun	192	61	70	18	30	5	-483	-3,410	-5,198	-6,322	-7,554	-7,890	-7,500	-5,902	-4,326	-2,428	-894	374	6,850	9,292	8,652	8,931	5,595	4,043
Jul	78	13	24	23	22	4	-72	-2,164	-4,334	-5,387	-5,298	-4,503	-3,335	-2,098	-1,096	-486	269	3,042	6,054	5,273	3,978	2,926	1,399	1,324
Aug	81	20	16	5	4	24	-29	-1,271	-3,552	-4,748	-4,852	-4,529	-3,749	-3,052	-2,244	-1,064	-17	2,989	6,030	5,209	4,221	3,219	1,431	1,465
Sep	28	5	2	1	1	42	0	-1,910	-4,706	-5,310	-5,230	-4,647	-3,731	-2,571	-1,485	-395	1,074	5,926	6,254	4,863	3,411	1,634	912	1,315
Oct	0	0	1	0	0	2	0	-872	-3,526	-4,268	-4,293	-3,841	-3,565	-3,352	-2,518	-889	1,581	4,710	4,816	4,389	2,945	1,939	1,266	1,407
Nov	0	0	0	0	0	0	0	-90	-2,344	-3,673	-3,951	-3,921	-3,892	-3,566	-2,666	-40	3,214	3,607	3,921	3,323	2,155	1,595	1,405	1,299
Dec	0	0	0	0	0	0	0	0	-542	-1,680	-1,775	-1,715	-2,078	-2,267	-1,883	-140	1,827	1,652	1,798	1,507	969	811	963	736

COI congestion

Area	Branch Group	Total Congestion Cost ($M)	Total Congestion Hours (Hrs)
COI Corridor	COI	48.23	994
COI Corridor	PG&E Table MT-VacaDixon 500 kV	6.40	161
COI Corridor	PG&E VacaDixon-Collinsville 500 kV	2.29	61
COI Corridor	PG&E Table MT-Tesla 500 kV	1.02	23
COI Corridor	PG&E Round MT-Table MT 500 kV	0.68	21

Row L	1	2	3	4	5	6	7	8	9	10	11	12	13	14	15	16	17	18	19	20	21	22	23	24
Jan	7	8	9	11	7	6	12	10	6	6	6	7	5	5	4	6	7	10	10	5	10	15	7	12
Feb	10	12	11	11	11	9	10	8	8	5	4	5	5	5	4	5	6	10	12	9	12	10	8	12
Mar	13	12	9	12	8	6	4	3	2	0	1	1	1	1	2	1	2	7	12	7	9	11	12	13
Apr	3	4	3	2	1	2	1	0	0	0	0	0	0	0	0	0	0	1	2	2	2	3	3	3
May	6	6	4	3	2	2	2	1	1	0	1	2	0	0	0	1	0	2	0	4	2	7	6	2
Jun	2	3	3	3	2	5	0	0	1	2	1	1	3	2	4	1	2	4	3	5	5	4	5	6
Jul	1	2	1	4	1	1	0	0	1	0	0	0	0	0	1	2	1	1	7	6	3	3	0	3
Aug	1	3	4	1	1	0	0	0	0	0	0	0	0	0	0	0	2	4	2	4	6	1	2	4
Sep	2	2	2	1	1	0	1	0	0	0	0	0	0	0	2	3	4	5	6	4	4	6	1	1
Oct	5	5	6	6	6	6	6	5	4	4	4	4	4	3	3	6	5	5	4	7	5	6	5	5
Nov	5	1	0	1	0	1	1	0	1	1	1	1	1	1	1	2	3	3	3	3	2	2	2	2
Dec	2	2	1	0	1	0	0	0	1	0	1	1	0	0	0	0	1	4	2	1	4	1	1	1

Row L	1	2	3	4	5	6	7	8	9	10	11	12	13	14	15	16	17	18	19	20	21	22	23	24
Jan	17,579	16,916	16,635	16,512	16,657	17,227	18,696	20,118	20,272	20,013	19,833	19,516	19,130	18,873	18,747	19,066	19,965	20,722	21,469	21,394	20,974	20,370	19,487	18,275
Feb	19,475	18,989	18,825	18,825	19,005	19,615	20,859	21,594	21,349	20,924	20,461	20,021	19,594	19,310	19,019	19,078	19,985	21,182	21,975	22,422	22,189	21,733	20,954	19,986
Mar	15,391	14,971	14,830	14,963	15,685	17,222	18,867	18,966	18,355	17,566	16,955	16,206	15,696	15,247	14,900	14,883	15,579	17,322	18,324	19,003	19,172	18,274	16,954	15,712
Apr	16,406	16,120	15,980	16,030	16,517	17,554	18,023	17,738	17,491	17,088	16,740	16,364	16,157	15,940	15,757	15,841	16,448	17,819	19,171	19,445	19,635	19,113	17,849	16,721
May	21,525	21,252	21,067	21,023	21,161	21,107	20,832	20,910	20,994	21,030	20,978	21,047	21,048	21,054	21,089	21,196	21,605	22,182	22,960	23,204	23,181	23,051	22,513	21,858
Jun	19,304	18,949	18,769	18,736	18,874	18,412	18,473	18,646	18,768	18,889	18,991	19,070	19,242	19,329	19,409	19,497	19,723	20,271	21,100	21,618	21,447	21,217	20,386	19,690
Jul	12,249	11,527	11,222	11,088	11,198	10,718	10,238	10,163	10,448	10,889	11,331	11,835	12,442	13,131	13,557	13,948	14,584	15,566	16,771	17,437	16,701	15,982	14,143	12,823
Aug	9,631	8,967	8,665	8,486	8,644	9,205	9,072	8,615	8,711	8,907	9,176	9,484	9,809	10,241	10,724	11,253	12,097	13,865	15,046	14,904	14,445	13,521	11,427	10,192
Sep	7,530	7,001	6,834	6,720	7,039	8,167	9,193	8,501	8,182	8,148	8,101	8,098	8,161	8,210	8,373	8,688	9,923	11,667	12,207	12,313	11,959	10,950	8,957	7,867
Oct	7,426	6,947	6,775	6,765	7,229	8,620	10,628	10,546	10,165	9,881	9,522	9,224	8,866	8,600	8,437	8,933	10,192	11,051	11,654	11,672	11,135	10,213	8,708	7,746
Nov	11,059	10,379	10,093	9,920	10,117	11,077	12,804	14,137	14,105	13,823	13,485	12,959	12,245	11,656	11,409	12,287	13,554	14,653	15,759	15,656	15,229	14,520	13,472	12,078
Dec	11,283	10,685	10,253	9,984	10,104	10,802	12,434	13,849	14,269	14,149	13,886	13,489	13,055	12,718	12,482	13,150	14,182	15,195	15,897	15,592	15,131	14,480	13,607	12,255

COI congestion increased, compared with the previous cycle's PCM results

- NW hydro condition and dispatch
- NW solar
- WY wind

COI congestion pattern vs NW Hydro pattern

- COI congestion was high in Janurary~March, consistent with NW Hydro condition in these months
- In April~June, California solar surplus can be high, although NW Hydro was also high
- COI congestion was relatively low in daytime, partially due to California solar was high in daytime
- NW Hydro dispatch followed the NW net load, which resulted in high hydro generation outside NW solar hours

California ISO

Other WECC Paths congestion

Area	Branch Group	Total Congestion Cost ($M)	Total Congestion Hours (Hr)
Path 46 WOR	Path 46 WOR	11.42	150

Area	Branch Group	Total Congestion Cost ($M)	Total Congestion Hours (Hrs)
Path 15 Corridor	Path 15	3.79	88
Path 15 Corridor	PG&E Gates-Midway 500 kV	2.31	106
Path 15 Corridor	PG&E Los Banos-Gates 500 kV	1.10	29
Path 15 Corridor	Path 15 Corridor - Panoche-Gates 230 kV	0.27	12

- Path 46 congestion happened when the flow was from east to west
- Path 15 congestion happened when the flow was from south to north

SCE areas with high congestion cost

Area	Branch Group	Congestion Cost ($M)	Congestion Duration (Hr)
SCE NOL	SCE NOL Kramer-Victor 230 kV	53.51	2,076
SCE NOL	SCE NOL Lugo 500 kV Transformer	23.01	1,981
SCE NOL	SCE-LADWP Path 60	0.83	484
SCE NOL	SCE NOL Kramer-Victor 115 kV	0.43	1,138
SCE NOL	SCE NOL Victor-Lugo 230 kV	0.15	13

Area	Branch Group	Congestion Cost ($M)	Congestion Hours (Hr)
SCE EOL	SCE-LADWP Eldorado-McCullough 500 kV	43.42	2,135
SCE EOL	SCE Victorville-Lugo 500 kV	15.90	144
SCE EOL	Path 61 (Victorville-Lugo)	5.16	50
SCE EOL	SCE EOL Pisgah-Lugo 230 kV	0.32	579
SCE EOL	SCE Harry Allen - Eldorado 500 kV	0.02	3

Area	Branch Group	Congestion Cost ($M)	Congestion Hours (Hr)
SCE W.LA	SCE W.LA LCIENEGA-LA FRESA 230 kV	26.22	201
SCE W.LA	SCE W.LA Litehipe-Mesa Cal 230 kV	0.88	34
SCE W.LA	SCE W.LA LagunaBell-Mesa Cal 230 kV	0.00	13

GridLiance/VEA area congestion

Area	Branch Group	Congestion Cost ($M)	Congestion Hours (Hr)
GridLiance/VEA	GridLiance/VEA Innovation-Desert View 230 kV	44.08	2,586
GridLiance/VEA	GridLiance/VEA Mead S-Sloan Canyon 230 kV	15.88	905
GridLiance/VEA	GridLiance/VEA Innovation 230/138 kV	4.50	877
GridLiance/VEA	GridLiance/VEA 138 kV	1.51	162
GridLiance/VEA	GridLiance/VEA Gamebird 230/138 kV	0.17	103
GridLiance/VEA	GridLiance/VEA Sloan Canyon-Eldorado 500 kV	0.15	14

- Beatty 230 kV upgrades presented in the GridLiance/VEA policy assessment result presentation were modeled in the PCM in order to have feasible dispatch for the portfolio generators originally proposed at the 138 kV buses

SDG&E area with high congestion cost

Area	Branch Group	Congestion Cost ($M)	Congestion Hours (Hr)
SDGE San Diego Southern	SDGE DOUBLTTP-FRIARS 138 kV	13.04	1,329
SDGE San Diego Southern	SDGE Suncrest-Sycamore 230 kV	11.04	429
SDGE San Diego Southern	SDGE Silvergate-Bay Blvd 230 kV	5.12	302
SDGE San Diego Southern	SDGE Silvergate-Old Town 230 kV	0.24	64

PG&E areas with high congestion cost

Area	Branch Group	Congestion Cost ($M)	Congestion Hours (Hr)
PG&E Panoche/Oro Loma area	PG&E Oro Loma 70 kV	23.95	1,614
PG&E Collinsville-Pittsburg 230 kV	PG&E Collinsville-Pittsburg 230 kV	16.59	1,184
PG&E Fresno	PG&E GWF_HEP-CONTADINA 115 kV	12.90	568
PG&E Panoche/Oro Loma area	PG&E Panoche/Oro Loma 115 kV	8.51	642
PG&E Mosslanding-Las Aguilas 230 kV	PG&E Mosslanding-Las Aguilas 230 kV	8.21	421
PG&E North Valley	PG&E Cottonwood-Round MT 230 kV	3.32	84
PG&E VacaDixon-Tesla 500 kV	PG&E VacaDixon-Collinsville 500 kV	2.29	61

Renewable curtailment

Renewable zone	Generation (GWh)	Curtailment (GWh)	Total potential (GWh)	Curtailment Ratio
SCE Tehachapi	31,046	757	31,804	2.38%
PG&E Fresno/Kern	17,895	447	18,342	2.44%
SCE Eastern	15,324	595	15,919	3.73%
SDGE IV	8,336	0	8,336	0.00%
SCE NOL	7,417	388	7,805	4.98%
PG&E Diablo OSW	7,629	105	7,734	1.36%
GridLiance/VEA	7,304	150	7,454	2.01%
NM	6,251	260	6,511	3.99%
AZ	5,650	136	5,786	2.35%
SCE EOL	5,463	126	5,590	2.26%
PG&E Central Valley	5,459	21	5,480	0.38%
WY	3,878	159	4,037	3.93%
PG&E Central Coast	2,799	51	2,849	1.78%
SCE Vestal-Rector	2,340	73	2,414	3.03%
PG&E North Valley	2,237	6	2,242	0.26%
NW	1,847	212	2,059	10.31%
SCE Ventura	1,290	50	1,340	3.74%
SCE Antelope 66 kV	926	23	949	2.39%
PG&E Humbolt OSW	617	3	620	0.41%
SCE LA Basin	315	4	320	1.40%
IID	309	0	309	0.01%
SDGE San Diego	262	0	262	0.00%
PG&E GBA	109	1	110	0.90%
Total	134,702	3,567	138,269	2.58%

- Wind and solar curtailment reduced, compared with the results in the previous cycle although total renewable capacity increased, attributed to
  - Battery capacity increased
  - Transmission upgrades approved in the previous cycle, specifically
    - GridLiance/VEA 230 kV upgrades
    - Manning, Collinsville, Mosslanding-Las Aguilas
  - Improved busbar mapping for battery and renewable generators
- Curtailment in some areas noticeably reduced
    - GridLiance/VEA
    - PG&E Fresno
    - SCE Tehachapi

30 MMT portfolio preliminary results – congestion and curtailment

Congestion aggregated by area

Area	Total Congestion Cost ($M)
COI Corridor	373.00
SCE EOL	281.20
Path 46 WOR	234.09
SDGE San Diego Southern	213.76
GridLiance/VEA	176.11
PG&E Mosslanding-Las Aguilas 230 kV	155.58
PG&E Collinsville-Pittsburg 230 kV	151.70
SCE W.LA	111.90
PG&E Fresno	88.60
SCE NOL	80.66
PG&E Panoche/Loma area	39.67
SDGE/CFE	34.34
SCE Eastern	31.76
Path 26 Corridor	26.84
Path 15 Corridor	20.71
PG&E/TID Exchequer	16.14
SCE Vincent	16.03
SCE E.LA	7.48
SCE J.Hinds-Mirage	6.29
PG&E Sierra	5.84
PG&E GBA	4.63
Path 41 Sylmar transformer	3.26
SCE Antelope 66kV	2.93
PG&E Tesla-Los Banos 500 kV	2.89
PG&E North Valley	2.45
PDCI	2.34

- Same transmission assumptions were used in the base portfolio PCM and the 30 MMT portfolio PCM
- Two main drivers for congestion cost surge in the 30 MMT portfolio PCM
  - Incremental renewable resources in the 30 MMT portfolio
  - CEC 2035 high electrification load forecast
- Transmission violations were observed in some areas
  - Indicated that PCM simulation could not find infeasible generation dispatch at some hours based on the current transmission assumption
  - Transmission assumption for the 30 MMT portfolio PCM needs to be further evaluated

COI corridor congestion

Area	Branch Group	Cost_F ($M)	Duration_F (Hrs)	Cost_B ($M)	Duration_B (Hrs)	Total Congestion Cost ($M)	Total Congestion Hours (Hrs)
COI Corridor	PG&E Table MT-VacaDixon 500 kV	210.44	1,547	0.00	0	210.44	1,547
COI Corridor	COI	103.19	614	0.00	0	103.19	614
COI Corridor	PG&E Round MT-Table MT 500 kV	43.69	95	0.00	0	43.69	95
COI Corridor	PG&E Table MT-Tesla 500 kV	13.42	54	0.00	0	13.42	54
COI Corridor	PG&E VacaDixon-Collinsville 500 kV	2.26	44	0.00	0	2.26	44

- Additional Humboldt offshore wind (1487 MW) was modeled at the 500 kV bus on the Round MT-Table MT 500 kV line, which aggravated congestion on Round MT – Table MT and the downstream 500 kV lines
  - Additional alternatives will also be assessed

GridLiance/VEA congestion

Area	Branch Group	Cost_F ($M)	Duration_F (Hrs)	Cost_B ($M)	Duration_B (Hrs)	Total Congestion Cost ($M)	Total Congestion Hours (Hrs)
GridLiance/VEA	GridLiance/VEA Innovation-Desert View 230 kV	138.86	7,538	0.00	0	138.86	7,538
GridLiance/VEA	GridLiance/VEA Innovation 230/138 kV	21.45	3,943	0.00	0	21.45	3,943
GridLiance/VEA	GridLiance/VEA 138 kV	0.00	0	7.30	1,920	7.30	1,920
GridLiance/VEA	GridLiance/VEA Mead S-Sloan Canyon 230 kV	0.00	0	6.08	889	6.08	889
GridLiance/VEA	GridLiance/VEA Gamebird 230/138 kV	2.40	1,074	0.00	5	2.40	1,079
GridLiance/VEA	GridLiance/VEA Sloan Canyon-Eldorado 500 kV	0.03	7	0.00	0	0.03	7

- 2800 MW of incremental solar in the GridLiance/VEA area

Southern CA East to West corridors congestion

Area	Branch Group	Cost_F ($M)	Duration_F (Hrs)	Cost_B ($M)	Duration_B (Hrs)	Total Congestion Cost ($M)	Total Congestion Hours (Hrs)
Path 46 WOR	Path 46 WOR	234.09	223	0.00	0	234.09	223
Path 49 (EOR)	Path 49 (EOR)	0.13	1	0.00	0	0.13	1
SCE Eastern	SCE Eastern RedBluff-Devers 500 kV	0.00	0	22.11	828	22.11	828
SCE Eastern	SCE Eastern Palo Verde-Colorado River 500 kV	0.00	1	9.62	12	9.63	13
SCE Eastern	SCE RedBluff-Devers 500 kV	0.00	0	0.02	1	0.02	1
SCE Eastern	SCE Vista-SanBernadino 230 kV	0.00	0	0.00	1	0.00	1
SCE EOL	SCE Lugo-Victorville	0.00	0	163.57	163	163.57	163
SCE EOL	Path 61 (Victorville-Lugo)	89.12	27	0.09	36	89.21	63
SCE EOL	SCE-LADWP Eldorado-McCullough 500 kV	28.26	1,015	0.00	0	28.26	1,015
SCE EOL	SCE Pisgah-Lugo 230 kV	0.43	1,236	0.00	0	0.43	1,236
SCE EOL	SCE Harry Allen - Eldorado 500 kV	0.15	1	0.00	0	0.15	1
SDGE San Diego Southern	SDGE Suncrest-Sycamore 230 kV	97.81	1,294	0.00	0	97.81	1,294
SDGE San Diego Southern	SDGE Silvergate-Bay Blvd 230 kV	0.00	0	76.91	459	76.91	459
SDGE San Diego Southern	SDGE DOUBLTTP-FRIARS 138 kV	0.00	0	18.14	1,085	18.14	1,085
SDGE San Diego Southern	SDGE Miguel 500 kV transformer	0.00	0	11.60	247	11.60	247
SDGE San Diego Southern	SDGE Silvergate-Old Town 230 kV	9.30	60	0.00	0	9.30	60

- Congestion in these corridors increased attributed to
  - Incremental renewable in NM, NV, WY, and AZ, and in the GridLiance/VEA area

SCE LA Basin congestion

Area	Branch Group	Cost_F ($M)	Duration_F (Hrs)	Cost_B ($M)	Duration_B (Hrs)	Total Congestion Cost ($M)	Total Congestion Hours (Hrs)
SCE W.LA	SCE W.LA LCIENEGA-LA FRESA 230 kV	0.00	0	81.85	975	81.85	975
SCE W.LA	SCE W.LA Litehipe-Mesa Cal 230 kV	0.00	0	24.19	380	24.19	380
SCE W.LA	SCE W.LA LagunaBell-Mesa Cal 230 kV	5.83	347	0.00	0	5.83	347
SCE E.LA	SCE E. LA Mira Loma -Chino 230 kV	0.00	0	4.57	102	4.57	102
SCE E.LA	SCE E. LA Alberhill-Valley 500 kV	0.00	0	2.91	57	2.91	57
SCE W.LA	SCE W.LA Barre-Villa Park 230 kV	0.00	0	0.03	19	0.03	19
SCE W.LA	SCE W.LA Barre-Ellis 230 kV	0.02	11	0.00	0	0.02	11

- The La Fresa to La Cienega 230 kV line is a transmission constraint identified in previous cycles. It potentially impacts the La Cienega/El Nido load area.
- Renewable in SCE Northern area, specifically Tehachapi area, aggravated congestion on the 230 kV corridor of Mesa Cal to Litehipe/LagunaBell to La Fresa to La Cienega
- Renewable in SCE EOL, Eastern, NOL, and in out of state areas contributed to congestion in the SCE's eastern LA Basin area

Path 26 corridor congestion

Area	Branch Group	Cost_F ($M)	Duration_F (Hrs)	Cost_B ($M)	Duration_B (Hrs)	Total Congestion Cost ($M)	Total Congestion Hours (Hrs)
Path 26 Corridor	Path 26	0.55	252	19.90	463	20.45	715
Path 26 Corridor	PG&E/SCE Midway-Whirlwind	0.08	36	5.50	499	5.58	535
Path 26 Corridor	PG&E/SCE Midway-Vincent #1	0.66	92	0.00	0	0.66	92
Path 26 Corridor	PG&E/SCE Midway-Vincent #2	0.15	16	0.00	0	0.15	16

- Path 26 congestion reduced compared with the base portfolio PCM results, as the incremental offshore wind at Diablo and the incremental solar and battery in other PG&E areas provided counter-flow to mitigate Path 26 congestion

PG&E south areas congestion

Area	Branch Group	Cost_F ($M)	Duration_F (Hrs)	Cost_B ($M)	Duration_B (Hrs)	Total Congestion Cost ($M)	Total Congestion Hours (Hrs)
PG&E Mosslanding-Las Aguilas 230 kV	PG&E Mosslanding-Las Aguilas 230 kV	0.00	0	155.58	2,216	155.58	2,216
PG&E Fresno	PG&E GWF_HEP-CONTADNA 115 kV	75.82	1,771	0.00	0	75.82	1,771
PG&E Panoche/Oro Loma area	PG&E Oro Loma 70 kV	31.80	1,639	0.20	288	32.00	1,927
Path 15 Corridor	Path 15	13.69	345	0.00	0	13.69	345
PG&E Panohce/Oro Loma area	PG&E Panoche/Oro Loma 115 kV	7.58	533	0.09	93	7.67	626
PG&E Fresno	PG&E Panoche-Gates 230 kV	0.00	0	6.39	738	6.39	738
PG&E Fresno	PG&E Warnerville-Wilson 230 kV	5.91	53	0.00	0	5.91	53
PG&E Tesla-Los Banos 500 kV	PG&E Tesla-Los Banos 500 kV	0.00	0	2.89	69	2.89	69
Path 15 Corridor	Path 15 Corridor - Panoche-Gates 230 kV	0.00	0	2.80	481	2.80	481
Path 15 Corridor	PG&E Los Banos-Gates 500 kV	0.00	0	2.78	50	2.78	50
Path 15 Corridor	PG&E Gates-Midway 500 kV	0.00	1	1.44	114	1.44	115

- Congestion in the PG&E Fresno/Kern areas and along the Path 15 corridor increased, which was attributed to the incremental offshore wind at Diablo and the incremental solar in the Fresno/Kern areas

Renewable curtailment (30 MMT portfolio)

Renewable zone	Generation (GWh)	Curtailment (GWh)	Total potential (GWh)	Curtailment Ratio
PG&E Fresno/Kern	33,797	6,313	40,110	15.74%
SCE Tehachapi	35,614	4,406	40,020	11.01%
SCE Eastern	23,615	3,941	27,556	14.30%
GridLiance/VEA	10,719	4,728	15,447	30.61%
PG&E Diablo OSW	14,236	861	15,097	5.71%
NM	13,527	1,417	14,944	9.48%
SCE NOL	9,003	2,697	11,700	23.05%
SDGE IV	10,808	39	10,847	0.36%
PG&E Humbolt OSW	8,181	116	8,297	1.39%
PG&E Central Valley	6,599	209	6,808	3.07%
WY	4,795	907	5,702	15.91%
SCE EOL	4,990	600	5,590	10.73%
AZ	4,088	671	4,759	14.10%
PG&E North Valley	3,843	131	3,975	3.31%
PG&E Central Coast	3,347	412	3,759	10.96%
SCE Vestal-Rector	3,065	589	3,654	16.12%
ID	2,199	195	2,394	8.16%
NW	1,649	410	2,059	19.92%
SCE Ventura	1,729	277	2,005	13.79%
SCE Antelope 66 kV	835	114	949	11.99%
PG&E GBA	381	16	398	4.08%
SCE LA Basin	298	22	320	6.86%
IID	299	10	309	3.16%
SDGE San Diego	261	1	262	0.30%
Total	197,875	29,082	226,957	12.81%

- Curtailment increased significantly in 30 MMT portfolio PCM simulation, compared with the base portfolio results
- Transmission constraints caused curtailment increase in many areas
- Net export limit enforced to reflecting market hurdle in the Western Interconnection system became binding in more hours than in the base portfolio PCM because
  - Total renewable capacity increased
  - Out of state renewable capacity increased as well
- Curtailment results will change if transmission assumption is modified

Next Steps

Economic planning study requests received

No.	Study Request	Submitted By	Location
1	SWIP North Project	LS Power	ID/NV
2	NGIV2 Project	NGIV2 and IID	AZ/CA
3	Fresno Avenal Area Congestion	PG&E	PG&E Fresno Avenal area
4	Inyokern 230 kV Upgrade	SCE	North of Lugo area
5	PTE Project	California Western Grid Development	Northern/Southern CA
6	Moss Landing – Las Aguilas 230 kV line reconductoring	Vistra	Northern CA
7	GLW 500 kV Upgrade Project	GridLiance West	Southern NV
8	GLW Geothermal Upgrade	GridLiance West	Southern NV

Preliminary list of high priority study areas to receive detailed consideration

- Preliminary high priority study areas were proposed based on the preliminary production cost simulation results for the base portfolio and the economic study requests:
  - SCE North of Lugo area congestion
  - PG&E Fresno area
    - Mosslanding - Las Aguilas 230 kV congestion reevaluation
    - Panoche/Oro Loma area congestion
    - Henrietta 115 kV congestion
  - GridLiance/VEA area and SCE East of Lugo area congestion
- The list may change with considering stakeholder comments and detailed planning study results

Next steps of simulation and economic assessment

- Continue to develop and enhance the CAISO Planning PCM, including but not limited to
  - Incorporating transmission upgrades to be recommended for approval in this TPP cycle
  - Updating transmission constraints identified in the reliability and policy studies
- Conduct production cost simulations using updated PCM for the Base and Sensitivity portfolios
- Conduct economic assessment for identified high priority upgrades or studies

California ISO

2032 Draft Long-Term Local Capacity Technical Study - Overall Summary

Catalin Micsa
Senior Advisor, Transmission Infrastructure Planning

2022-2023 Transmission Planning Process Stakeholder Meeting
November 17, 2022

Long-Term Local Capacity Technical Study

Based on the alignment of the CAISO Transmission Planning Process (TPP) with the CEC Integrated Energy Policy Report (IEPR) demand forecast and the CPUC Integrated Resource Plan (IRP), the Long-Term LCR assessment is to be evaluated ***every two years.***

In the 2022-2023 transmission planning process all LCR areas within the CAISO BAA will be evaluated for long-term assessment.

LCR Areas within CAISO

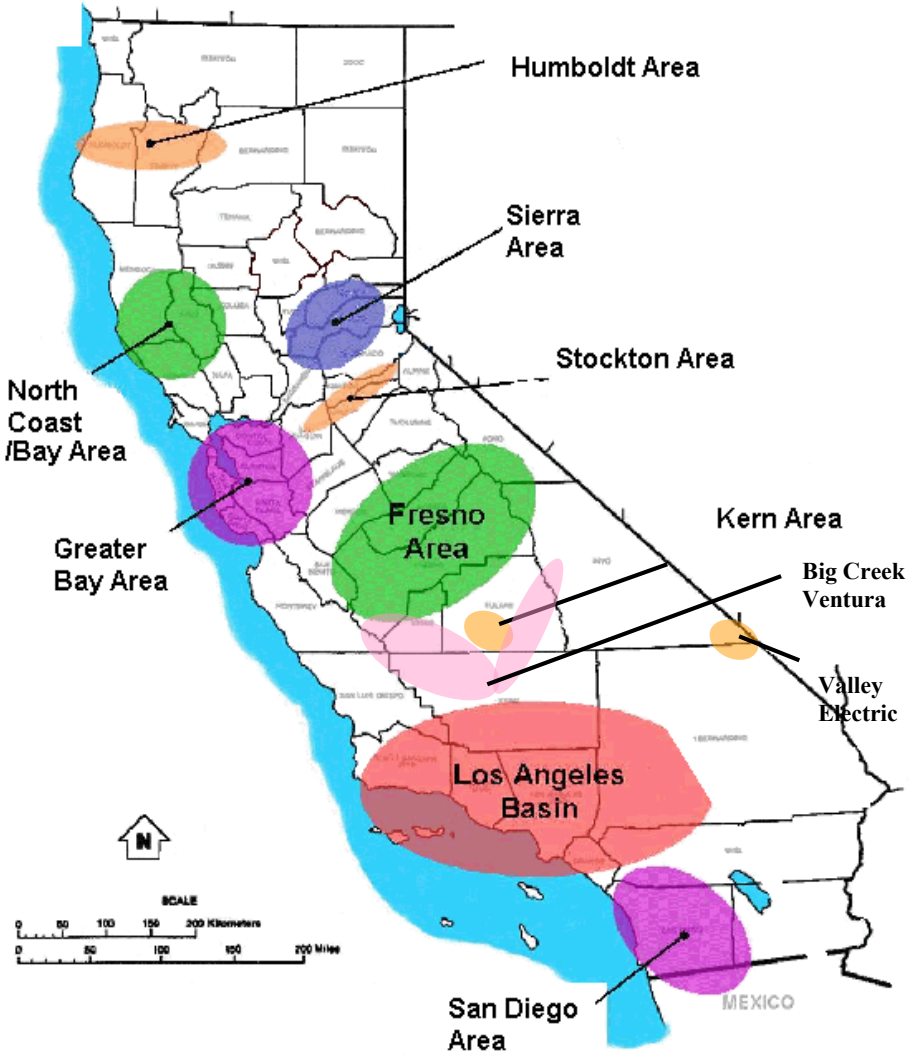

2032 Draft Long-Term LCR Needs

	Qualifying Capacity				Capacity Available At Peak	2032 LCR Need
Local Area Name	**QF/MUNI (MW)**	**Non-Solar (MW)**	**Solar (MW)**	**Total (MW)**	**Total (MW)**	**Capacity Needed**
Humboldt	0	193	0	**193**	**193**	**154**
North Coast / North Bay	138	773	0	**911**	**911**	**911***
Sierra	1206	698	5	**1909**	**1904**	**1450***
Stockton	136	472	18	**626**	**608**	**626***
Greater Bay	475	6951	10	**7436**	**7426**	**7426***
Greater Fresno	216	2759	436	**3411**	**2975**	**2750***
Kern	6	351	73	**430**	**357**	**424***
Big Creek/Ventura	424	3524	262	**4210**	**3948**	**1366**
LA Basin	1080	6368	11	**7459**	**7448**	**7388**
San Diego/ Imperial Valley	2	4993	378	**5373**	**4995**	**4849**
Total	3683	27082	1193	**31958**	**30765**	**13757**

General items

- All results are draft – the final results will be included in the draft 22-23 Transmission Plan
- All NQC values are draft
  - Ongoing effort is to include the new portfolio resources into the NQC totals
  - All “deficiency” numbers are subject to change
- All results are compared with year 2027 (released earlier this year)
- Majority of local needs have increased due to increase in the CEC load forecast
- Reminder: “4 hour” batteries is not a physical limitation, it limits the MWs of local resources that can be replaced on a 1 for 1 MW bases.

California ISO

2032 Draft Long-Term LCR Study Results Greater Bay Area

Binaya Shrestha
Manager, Regional Transmission North

2022-2023 Transmission Planning Process Stakeholder Meeting
November 17, 2022

Greater Bay Area Transmission System & LCR Subareas

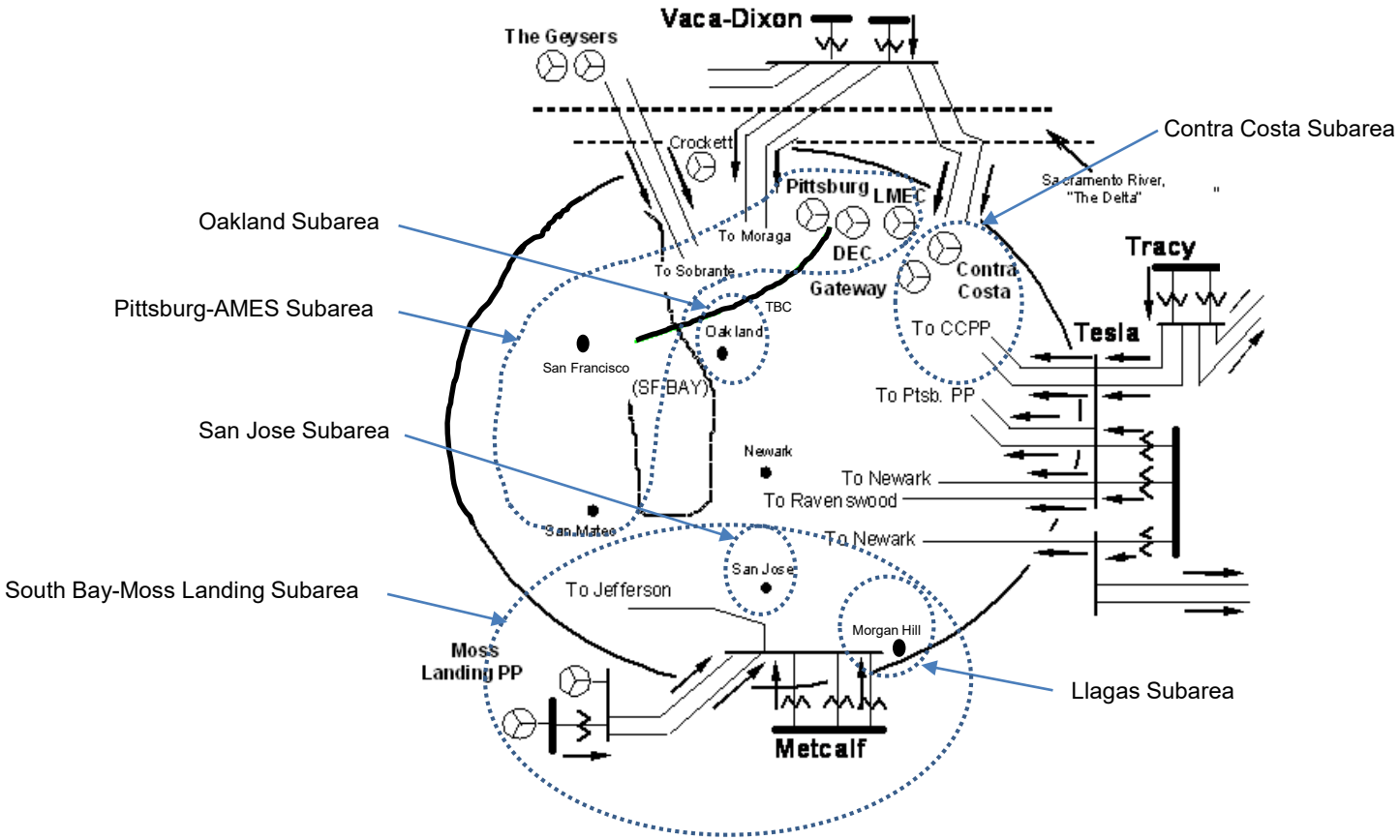

New major transmission projects

Project Name	Division	In-service Year
Christie-Sobrante 115 kV Line Reconductor	East Bay	2028
Cooley Landing-Palo Alto and Ravenswood-Cooley Landing 115 kV Lines Rerate	San Jose	2022
East Shore 230 kV Bus Terminals Reconfiguration	Mission	2026
East Shore-Oakland J 115 kV Reconductoring Project (name changed from East Shore-Oakland J 115 kV Reconductoring Project & Pittsburg-San Mateo 230 kV Looping Project since only the 115 kV part was approved)	East Bay	2022
Jefferson 230 kV Bus Upgrade	Peninsula	2026
Metcalf-Piercy & Swift and Newark-Dixon Landing 115 kV Upgrade	San Jose	2029
Monta Vista 230 kV Bus Upgrade	De Anza	2024
Moraga 230 kV Bus Upgrade	East Bay	2027
Moraga-Castro Valley 230 kV Line Capacity Increase Project	Diablo	2025
Moraga-Sobrante 115 kV Line Reconductor	East Bay	on hold
Morgan Hill Area Reinforcement (formerly Spring 230/115 kV substation)	San Jose	2026
Newark 230/115 kV Transformer Bank #7 Circuit Breaker Addition	Mission	2026
Newark-Milpitas #1 115 kV Line Limiting Facility Upgrade	San Jose	2022
North Tower 115 kV Looping Project	Mission	2030
Oakland Clean Energy Initiative	East Bay	2023
Pittsburg 230/115 kV Transformer Capacity Increase	Diablo	2025
Ravenswood – Cooley Landing 115 kV Line Reconductor	Peninsula	2023
Ravenswood 230/115 kV transformer #1 Limiting Facility Upgrade	Peninsula	2024
South of San Mateo Capacity Increase	Peninsula	2027
Martin 230 kV Bus Extension	San Francisco	2024
Contra Costa PP 230 kV Line Terminals Reconfiguration Project	Diablo	2025
Vasona-Metcalf 230 kV Line Limiting Elements Removal Project	San Jose	2025
San Jose Area HVDC Line (Newark - NRS)	San Jose	2028
San Jose Area HVDC Line (Metcalf – San Jose)	San Jose	2028
Series Compensation on Los Esteros-Nortech 115 kV Line	San Jose	2023
Metcalf 230 kV Substation Circuit Breaker #No 292 Upgrade	San Jose	2025
Cooley Landing Substation Circuit Breaker No #62 Upgrade	Peninsula	2026
New Collinsville 500 kV substation	Bulk/Diablo	2028

California ISO

Power Plant Changes

Additions resources modeled in 2032:

120 MW Portfolio In-State Wind at Birds Landing
100 MW Portfolio In-State Wind at Kelso
5 MW Portfolio Biomass/Biogas at Los Esteros
10 MW Portfolio Distributed Solar at Los Esteros
90 MW Portfolio Li_Battery at Los Esteros
19 MW Portfolio Distributed Solar at Martin (San Francisco H)
90 MW Portfolio Li_Battery at Martin (San Francisco H)
4 MW Portfolio Biomass/Biogas at Metcalf
35 MW Portfolio Distributed Solar at Metcalf

Additional retirements in 2032:

- None

Llagas Sub-area: Load and Resources

Load (MW)	**2032**	**Generation (MW)**	**Aug NQC**
Gross Load	290	Market, Net Seller, Battery, Solar	245
AAEE	-4	MUNI	0
ATE	19	QF	0
Behind the meter DG	-0	LTPP Preferred Resources	0
Net Load	**305**	Existing 20-minute Demand Response	0
Transmission Losses	2	Mothballed	0
Pumps	0	**Total**	**245**
Load + Losses + Pumps	**307**		

Llagas Sub-area: One-line diagram

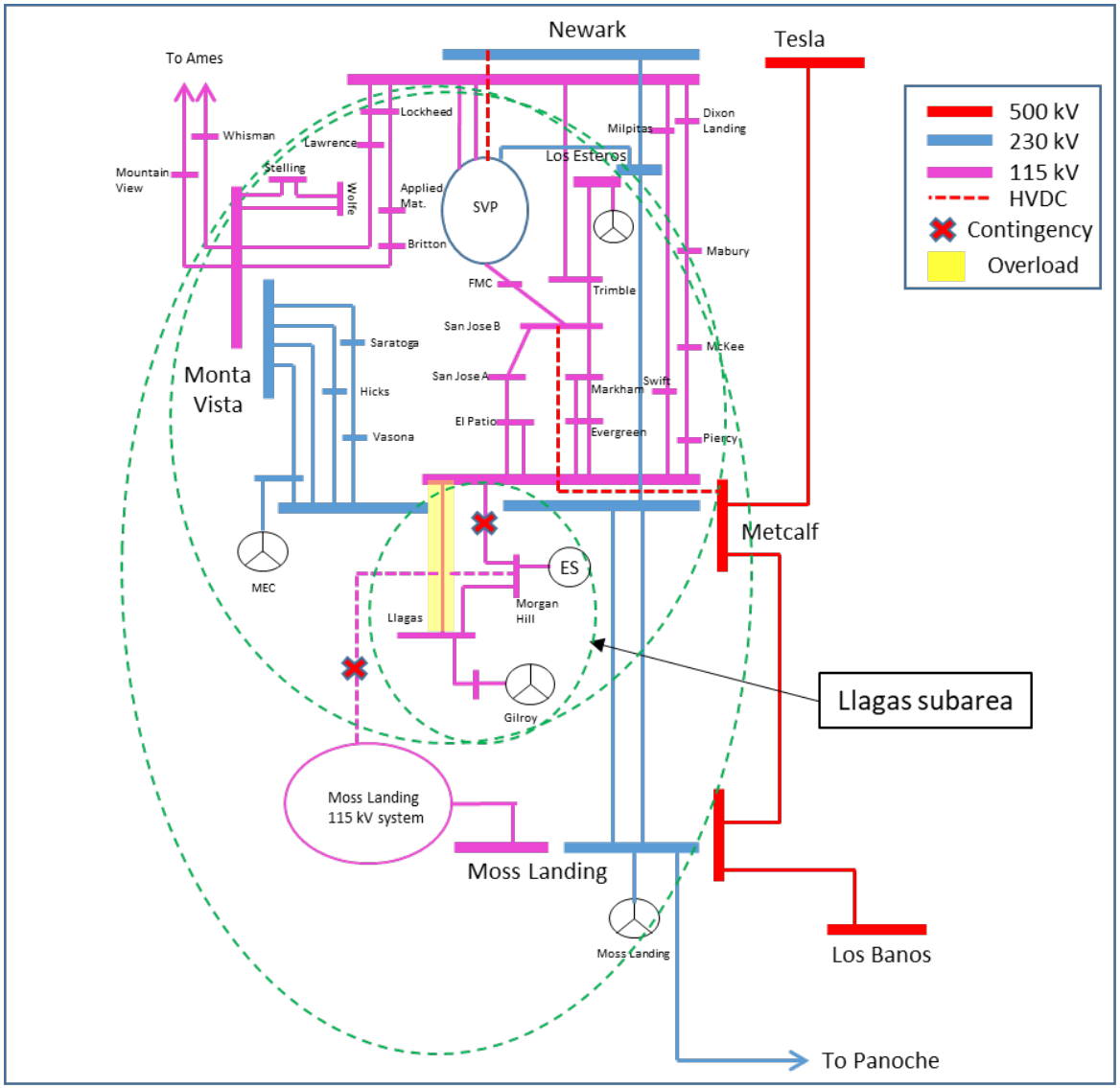

Llagas Sub-area: Requirements

Year	Category	Limiting Facility	Contingency	LCR (MW)
2032	P6	Metcalf-Llagas 115 kV line	Metcalf-Morgan Hill & Morgan Hill-Green Valley115 kV lines	145

Llagas Sub-area: Load Profiles

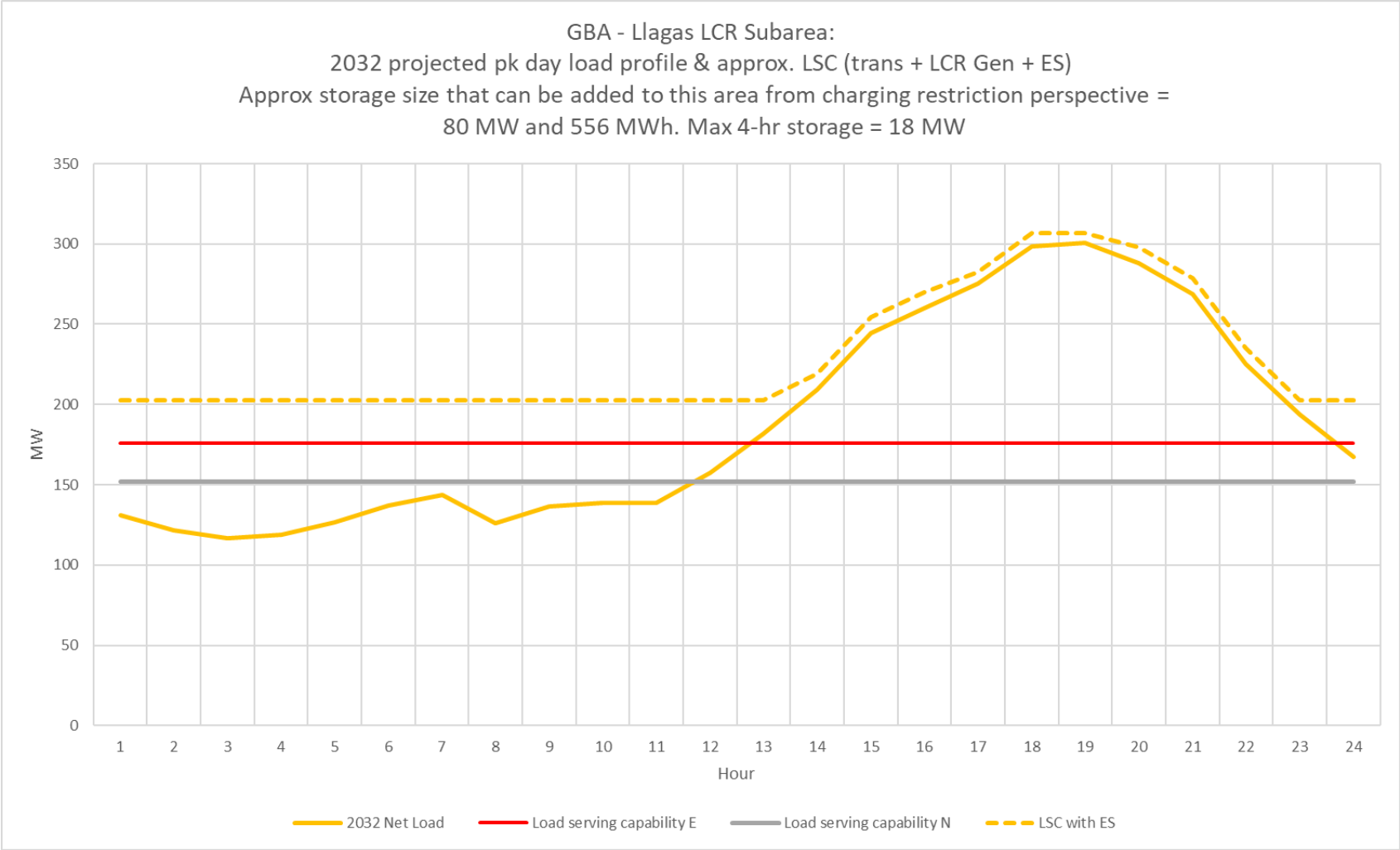

San Jose Sub-area: Load and Resources

Load (MW)	2032	Generation (MW)	Aug NQC
Gross Load	3,404	Market, Net Seller, Battery, Solar	749
AAEE	-43	MUNI	192
ATE	232	QF	0
Behind the meter DG	-0	**Total**	**941**
Net Load	**3,593**		
Transmission Losses	78		
Pumps	0		
Load + Losses + Pumps	**3,671**		

San Jose Sub-area: One-line diagram

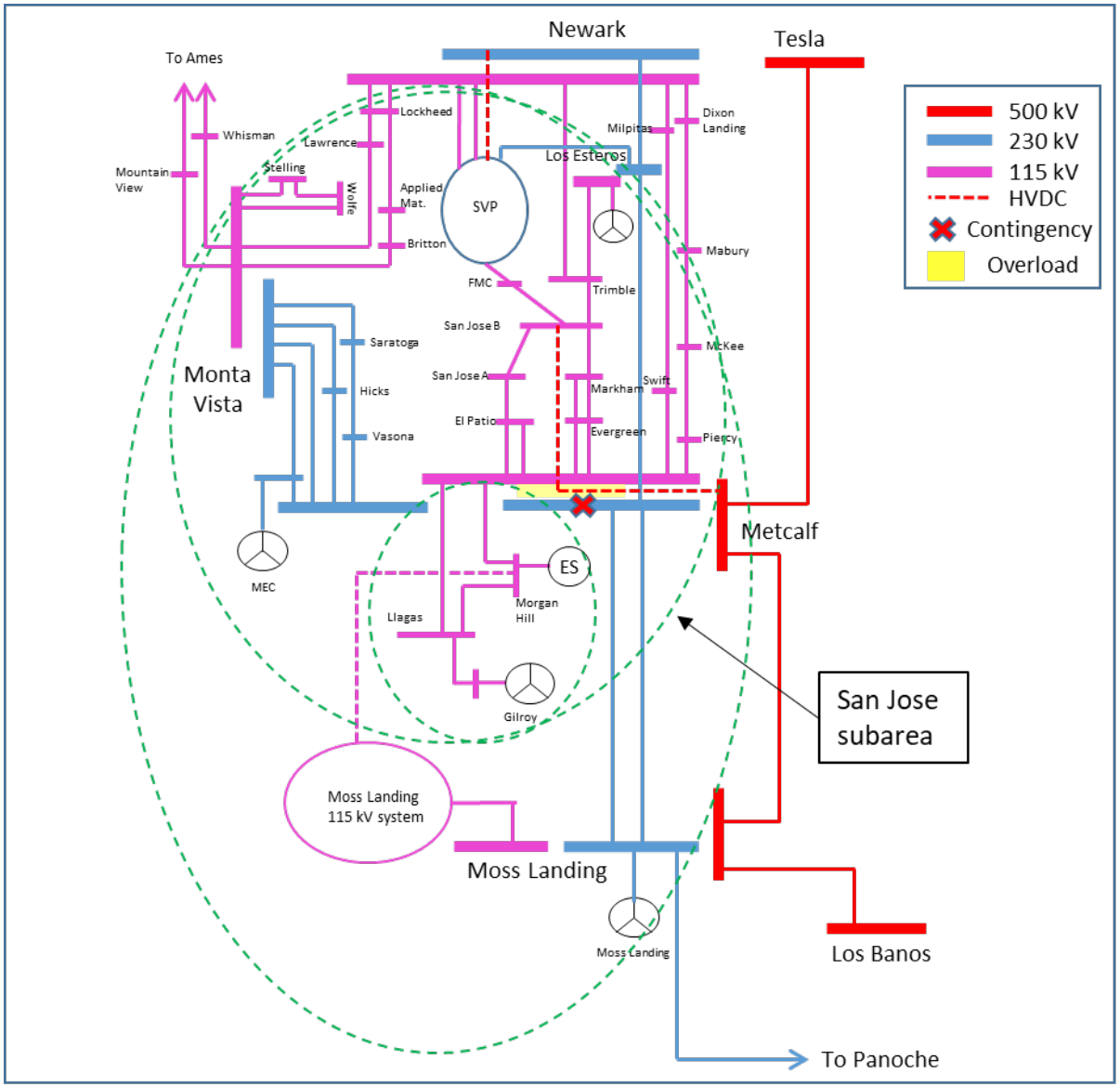

California ISO

San Jose Sub-area: Requirements

Year	Category	Limiting Facility	Contingency	LCR (MW) (deficiency)
2032 (First Limit)	P2	Metcalf 230/115 kV transformer # 1 or # 3	Metcalf 230 kV Bus Section 2D & 2E	1,060 (179)
2032 Second Limit)	P6	Metcalf-El Patio 115 kV line	Newark-NRS and Metcalf-San Jose B HVDC lines	545*

Note:
*Reliability project currently under review in 2022-2023 TPP that will address the first limit. The San Jose sub-area definition and effective generating units are different between the first and the second limit.

San Jose Sub-area: Load Profiles

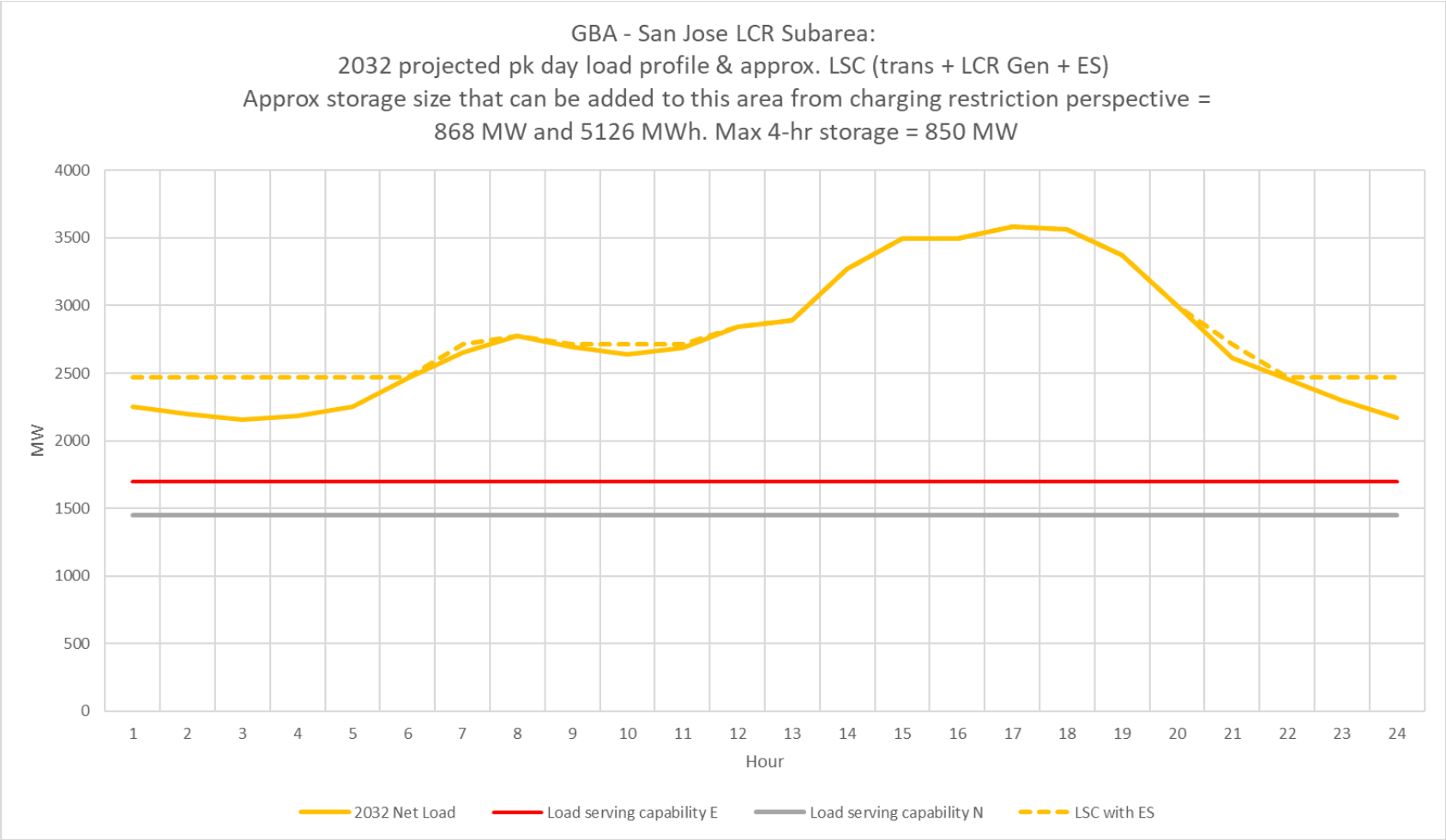

South Bay-Moss Landing Sub-area: Load and Resources

Load (MW)	**2032**	**Generation (MW)**	**Aug NQC**
Gross Load	5,158	Market, Net Seller, Battery, Solar	2,856
AAEE	-82	MUNI	192
ATE	368	QF	0
Behind the meter DG	-0	**Total**	**3,048**
Net Load	**5,444**		
Transmission Losses	124		
Pumps	0		
Load + Losses + Pumps	**5,568**		

South Bay-Moss Landing Sub-area: One-line diagram

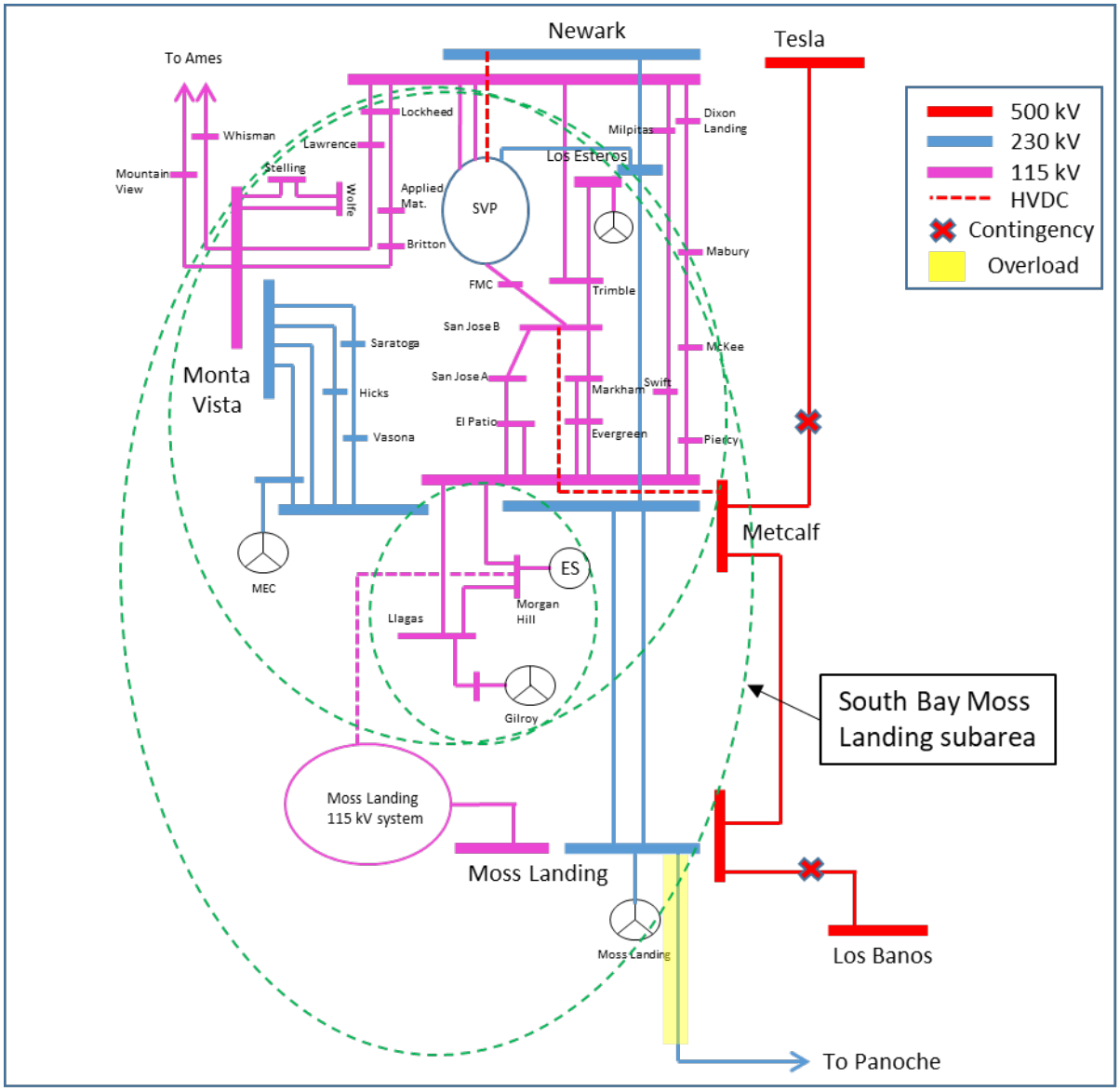

South Bay-Moss Landing Sub-area: Requirements

Year	Category	Limiting Facility	Contingency	LCR (MW) (deficiency)
2032	P6	Moss Landing-Las Aguilas 230 kV	Tesla-Metcalf 500 kV and Moss Landing-Los Banos 500 kV	3,242 (587)

South Bay-Moss Landing Sub-area: Load Profiles

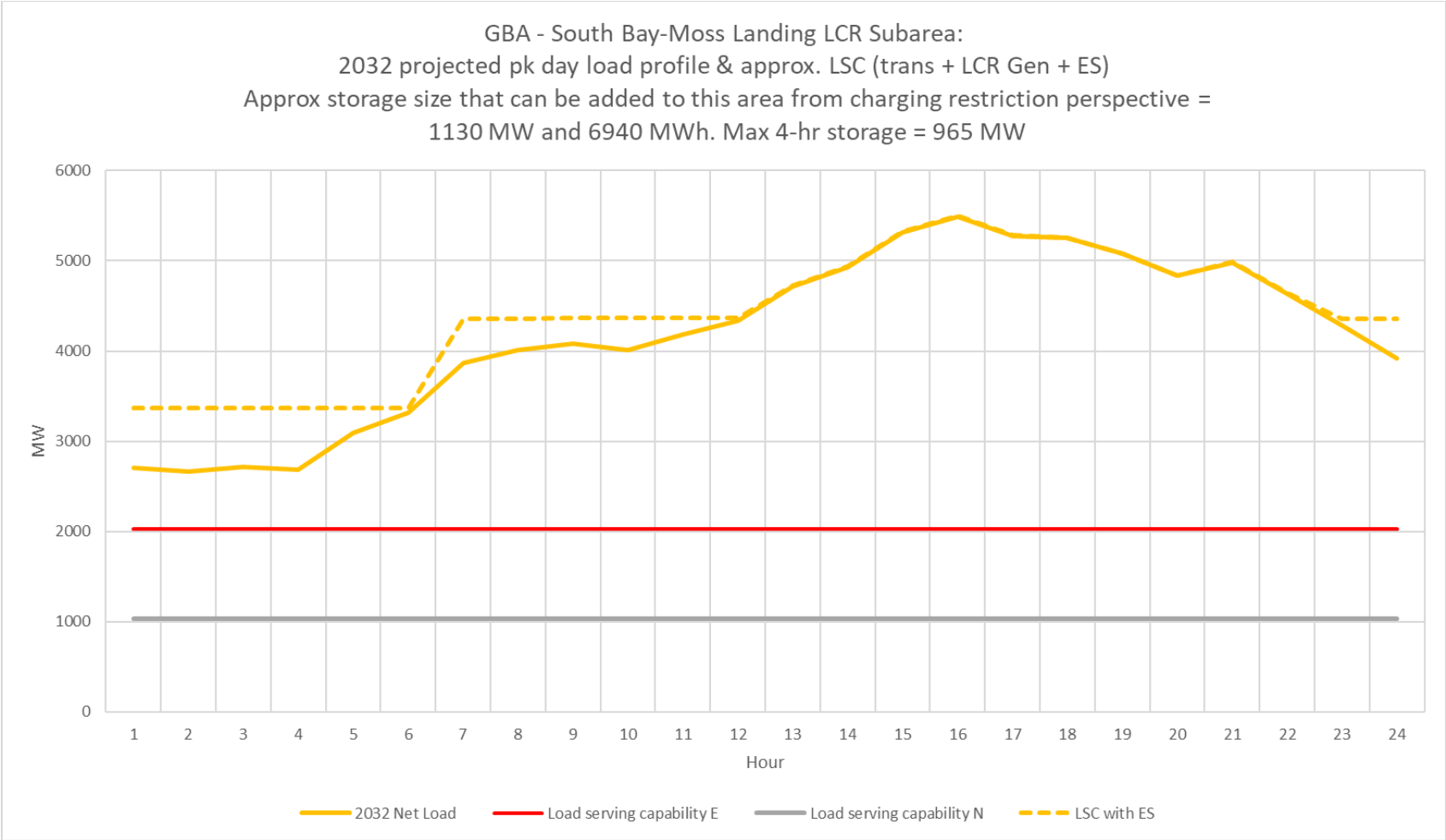

California ISO

Oakland Sub-area: Load and Resources

Load (MW)	**2032**	**Generation (MW)**	**Aug NQC**
Gross Load	183	Market, Net Seller, Battery Solar	55
AAEE	-1	MUNI	49
ATE	10	QF	0
Behind the meter DG	0	**Total**	**104**
Net Load	**192**		
Transmission Losses	0		
Pumps	0		
Load + Losses + Pumps	**192**		

Oakland Sub-area: Requirements

Year	Category	Limiting Facility	Contingency	LCR (MW)
2032	P6	D-L #1 115 kV cable	Oakland C-X #2 & #3 115 kV cables	35*

Note:
*This requirement doesn't reflect potential load transfer that could occur following the first contingency. An approved operating procedure including this load transfer could reduce this requirement.

Pittsburg-Ames-Oakland Sub-area: Load and Resources

Load (MW)	**2032**	**Generation (MW)**	**Aug NQC**
Gross Load	**NA – Flow through area.**	Market, Net Seller, Battery, Solar	2,333
AAEE		MUNI	49
Behind the meter DG		QF	217
Net Load		**Total Qualifying Capacity**	**2,599**
Transmission Losses			
Pumps			
Load + Losses + Pumps			

Ames/Pittsburg/Oakland Sub-area: One-line diagram

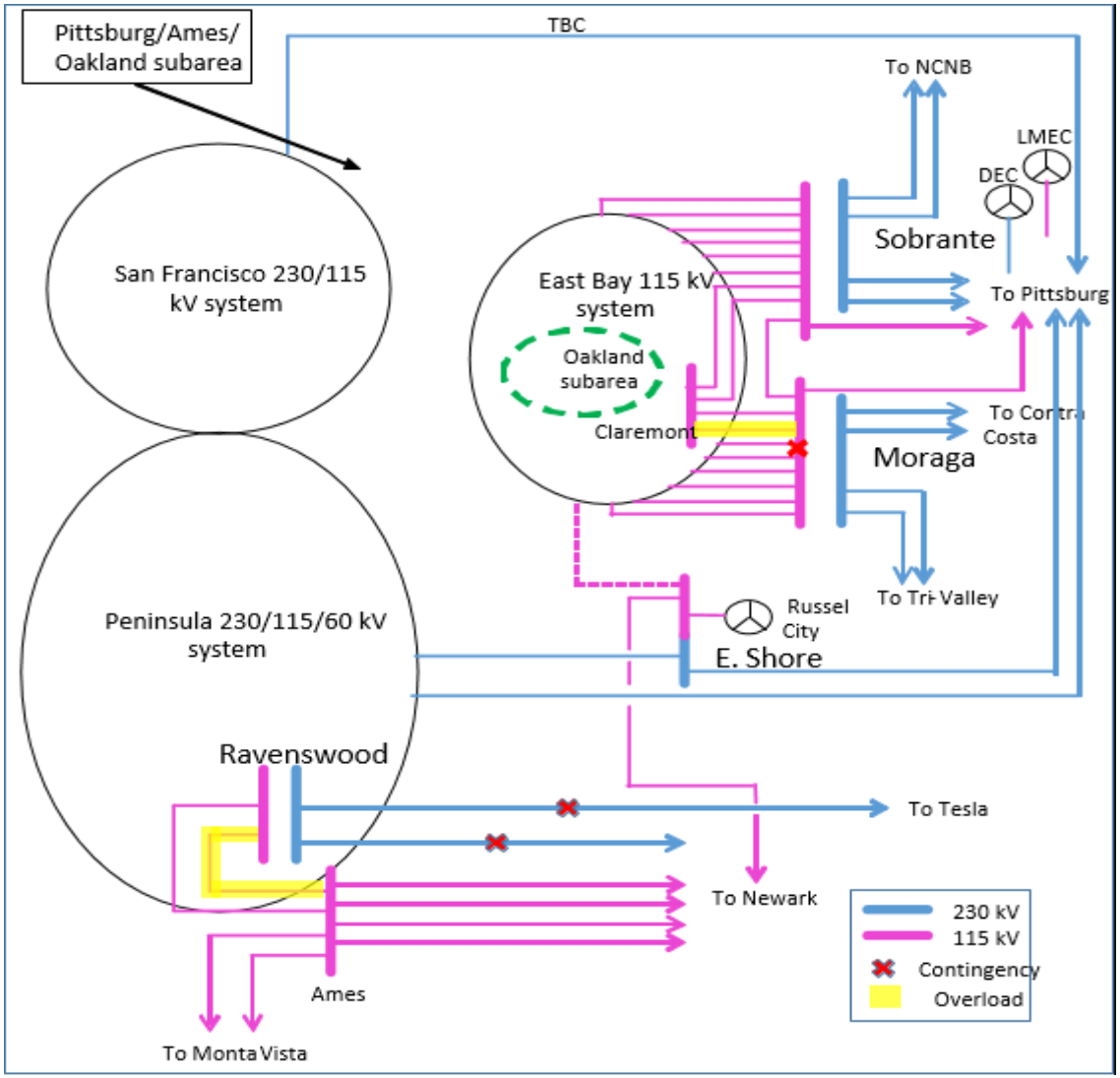

Ames/Pittsburg/Oakland Sub-area: Requirements

Year	Category	Limiting Facility	Contingency	LCR (MW)
2032 (First Limit)	P6	Collinsville-Pittsburg #1 or #2 230 kV lines	Collinsville-Pittsburg #2 or #1 230 kV lines	3,800 (1200)*
2032 (Second Limit)	P6	Ames-Ravenswood #1 or #2 115 kV line	Newark-Ravenswood & Tesla-Ravenswood 230 kV lines	2,288
	P2	Sobrante 230/115 kV bank #2	Pittsburg Section 1D & 1E 230 kV	

Note:
*The requirement for this constraint goes below the second requirement with the series reactors on the Collinsville-Pittsburg 230 kV lines as planned as part of the Collinsville project ultimate plan. This requirement can also be reduced with an operating solution of opening one of the 500/230 kV banks during the high load conditions.

Contra Costa Sub-area: Load and Resources

Load (MW)	**2032**	**Generation (MW)**	**Aug NQC**
Gross Load	**NA – Flow through area.**	Market, Net Seller, Battery, Solar	1,656
AAEE		MUNI	0
Behind the meter DG		QF	0
Net Load		Wind	278
Transmission Losses		**Total**	**1,934**
Pumps			
Load + Losses + Pumps			

Contra Costa Sub-area: One-line diagram

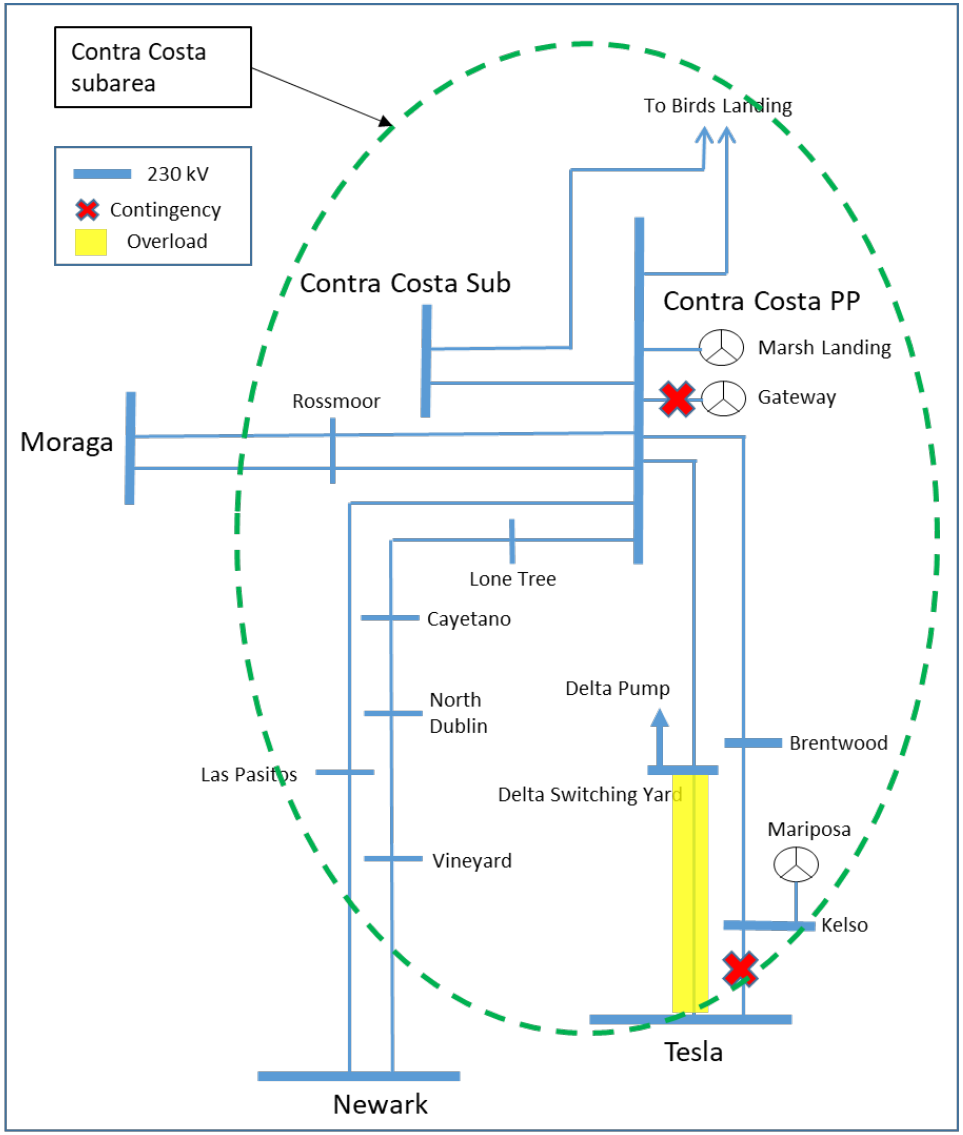

Contra Costa Sub-area: Requirements

Year	Category	Limiting Facility	Contingency	LCR (MW)
2032	P3	Delta Switching Yard-Tesla 230 kV Line	Kelso-Tesla 230 kV with the Gateway off line	1,315

Greater Bay Area Overall: Load and Resources

Load (MW)	**2032**	**Generation (MW)**	**Aug NQC**
Gross Load	11,931	Market, Net Seller, Battery	6,540
AAEE	-158	MUNI	241
ATE	1044	QF	234
Behind the meter DG	-0	Solar	10
Net Load	**12,817**	Wind	411
Transmission Losses	348	**Total**	**7,436**
Pumps	264		
Load + Losses + Pumps	**13,429**		

Greater Bay Area Overall: Requirements

Year	Category	Limiting Facility	Contingency	LCR (MW) (deficiency)
2032	P6	Metcalf 500/230 kV #13 transformer	Metcalf 500/230 kV #11 & #12 transformers	7,936 (500)

Greater Bay Area Sub-area: Load Profiles

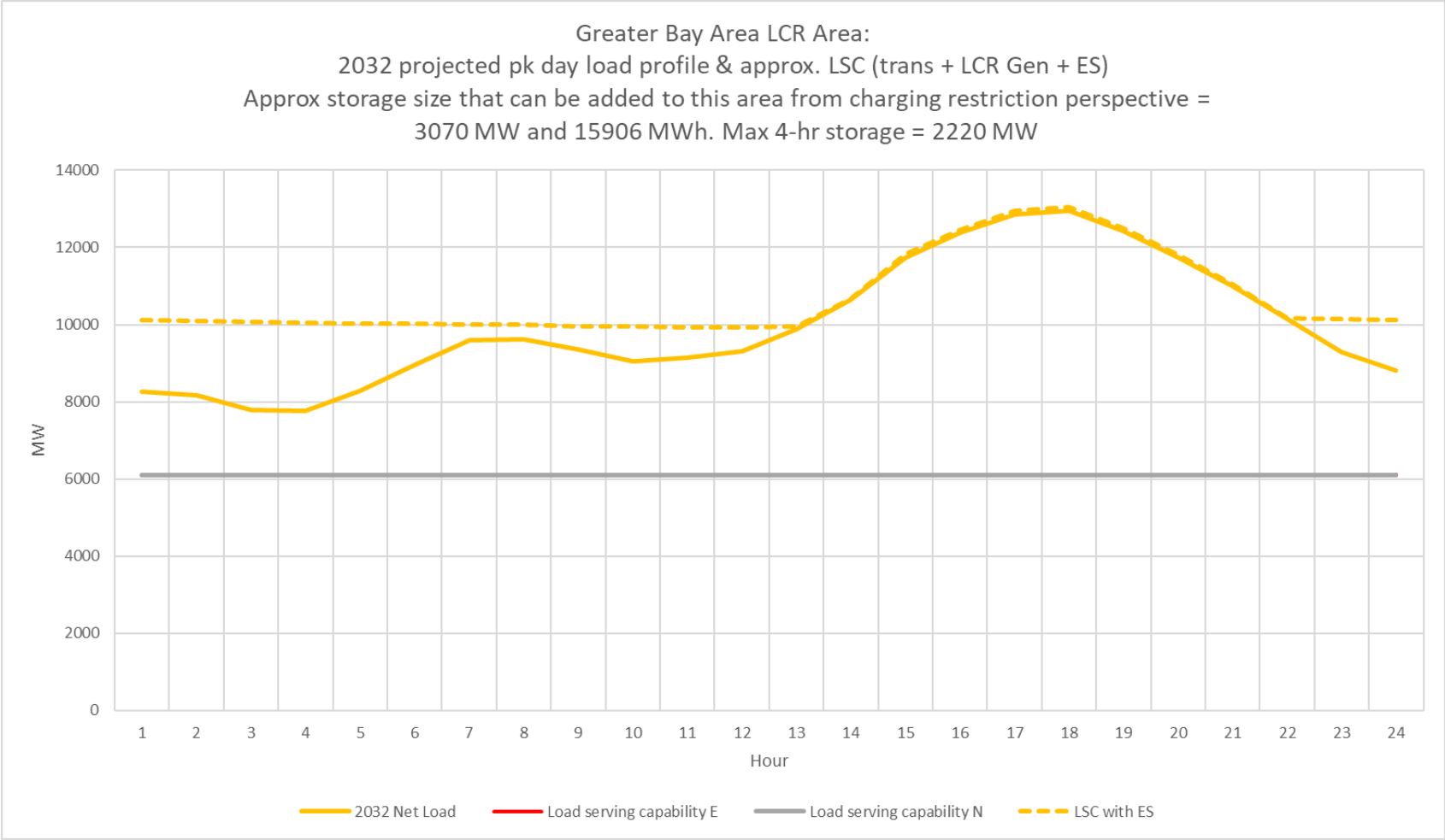

Greater Bay Area Total Generation & LCR Need

Generation	Market, Net Seller, Battery (MW)	MUNI (MW)	QF (MW)	Solar (MW)	Wind (MW)	Total MW
Aug NQC	6,540	241	234	10	411	7,436

Year	Existing Generation Capacity Needed (MW)	Deficiency (MW)	Total MW Need
2032	7,436	587	8,023

The overall LCR requirement has increased in 2032 mostly due to load growth.

Changes Compared to 2027 LCR Requirements

Sub-area	2027		2032	
	Load	LCR	Load	LCR
Llagas	259	86	307	145
San Jose	3,121	1,103 (224)	3,671	1,060 (179)
South Bay – Moss Landing	4,830	2,543	5,568	3,242 (587)
Oakland	193	39	192	35
Pittsburg – Ames – Oakland	NA*	2,187	NA*	2,288
Contra Costa	NA*	1,373	NA*	1,315
Overall	11,733	7,540 (170)	13,429	7,936 (500)

Note:
** Flow-through area. No defined load pocket.*

California ISO

2032 Draft Long-Term LCR Study Results Humboldt Area

Yara Khalaf

Senior Engineer, Regional Transmission – North

2022-2023 Transmission Planning Process Stakeholder Meeting

November 17, 2022

Humboldt Area Transmission System

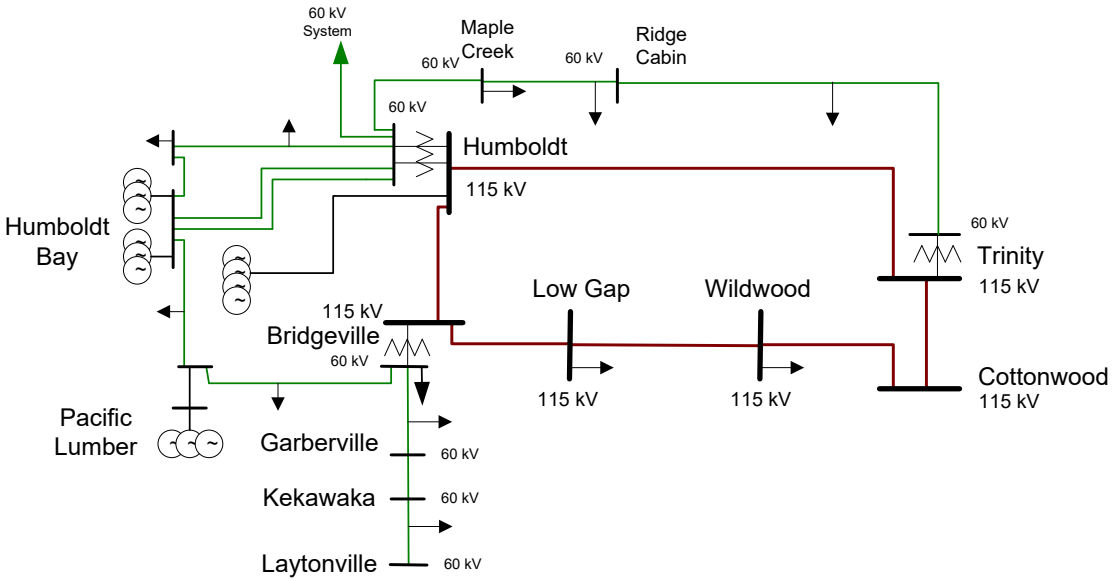

Topology changes

Transmission Additions:

- Maple Creek Reactive Support (rescoped to Willow Creek 60 kV Substation) – Q4 2027

Resource Additions:

- 15 MW Battery Storage

Resource Retirements:

- No new retirements

Humboldt: Load and Resources

Load (MW)		Generation (MW)	
Gross Load	158	Market	193
AAEE	-3	Wind	0
Behind the meter DG	0	Muni	0
Net Load	**155**	QF	0
Transmission Losses	27	**Total Qualifying Capacity**	**193**
Pumps	0		
Load + Losses + Pumps	**182**		

Humboldt Area: Requirements

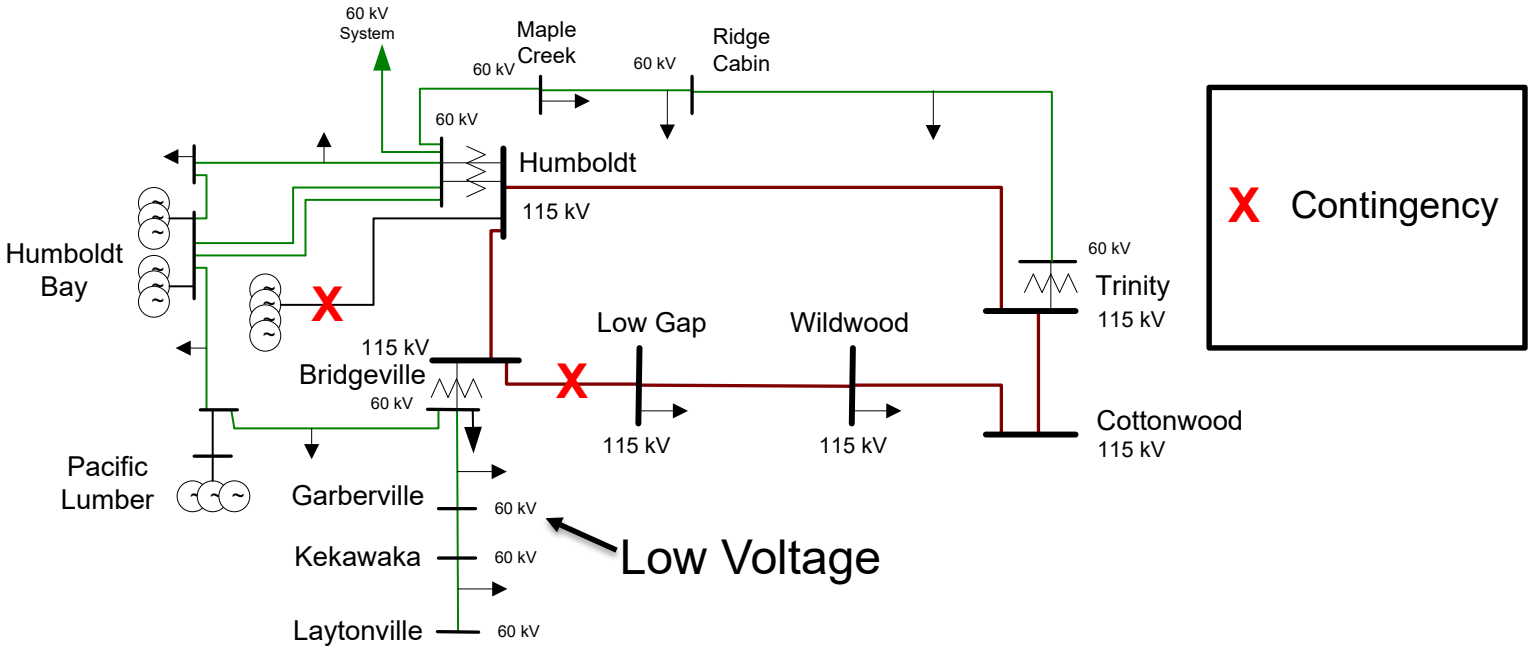

Year	Category	Limiting Facility	Contingency	LCR (MW) (Deficiency)
2032	P6	Low voltage at Garberville 60 kV	Cottonwood – Bridgeville 115 kV line + Humboldt – Humboldt Bay 115kV line	154

Humboldt Area: Load Profiles - 2032

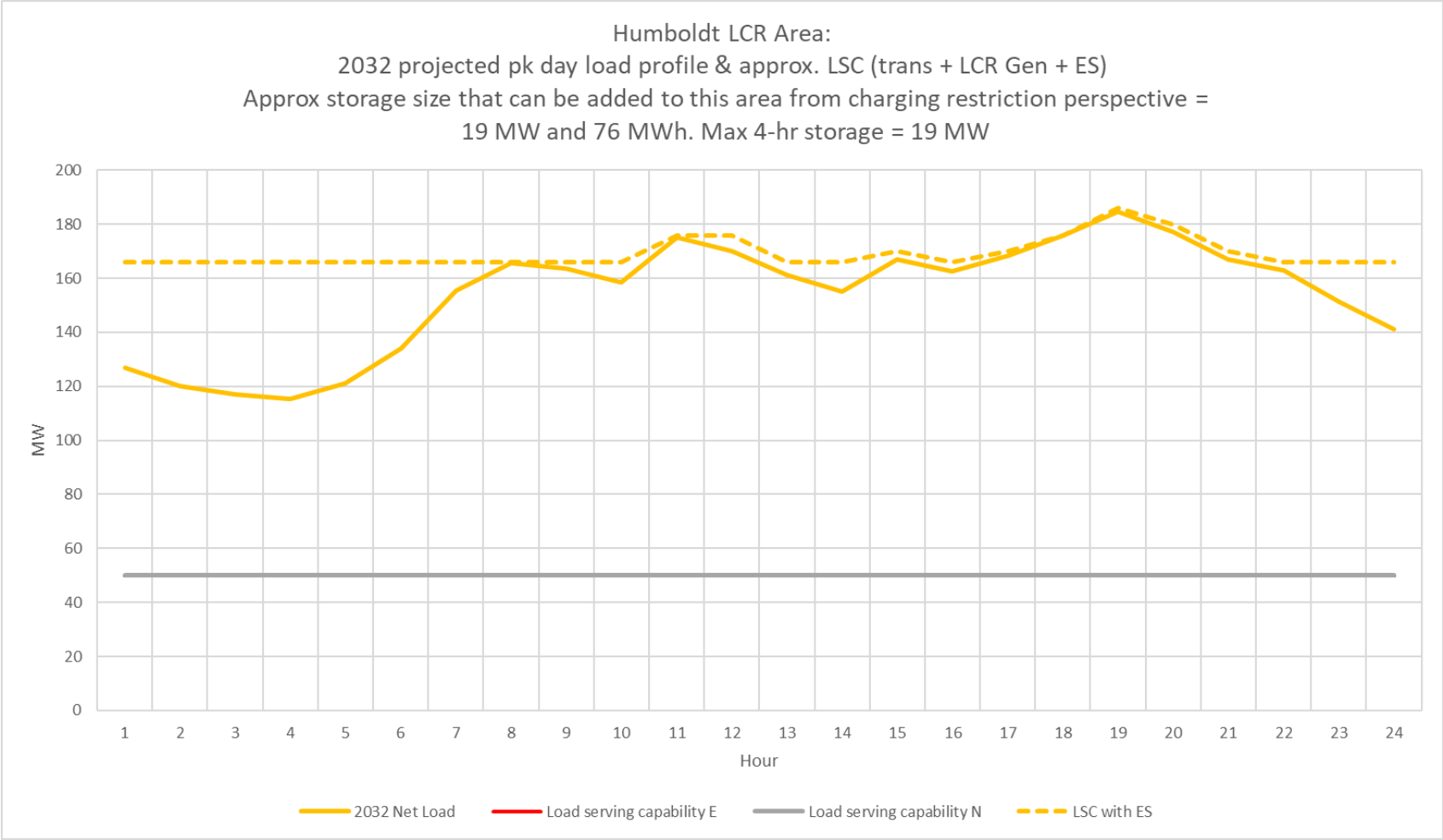

Changes between years

Subarea	2027		2032	
	Load	LCR	Load	LCR
Humboldt	180	147	182	154

The increase in the 2032 LCR need is mostly due to load forecast increase.

Humboldt Area Total LCR Need

Study Year	Existing Generation Capacity Needed (MW)	Deficiency (MW)	Total MW Need
2032	154	0	154

2032 Draft Long-Term LCR Study Results North Coast & North Bay Area

Bryan Fong

Senior Engineer, Regional Transmission – North

2022-2023 Transmission Planning Process Stakeholder Meeting

November 17, 2022

North Coast & Bay Area Transmission System

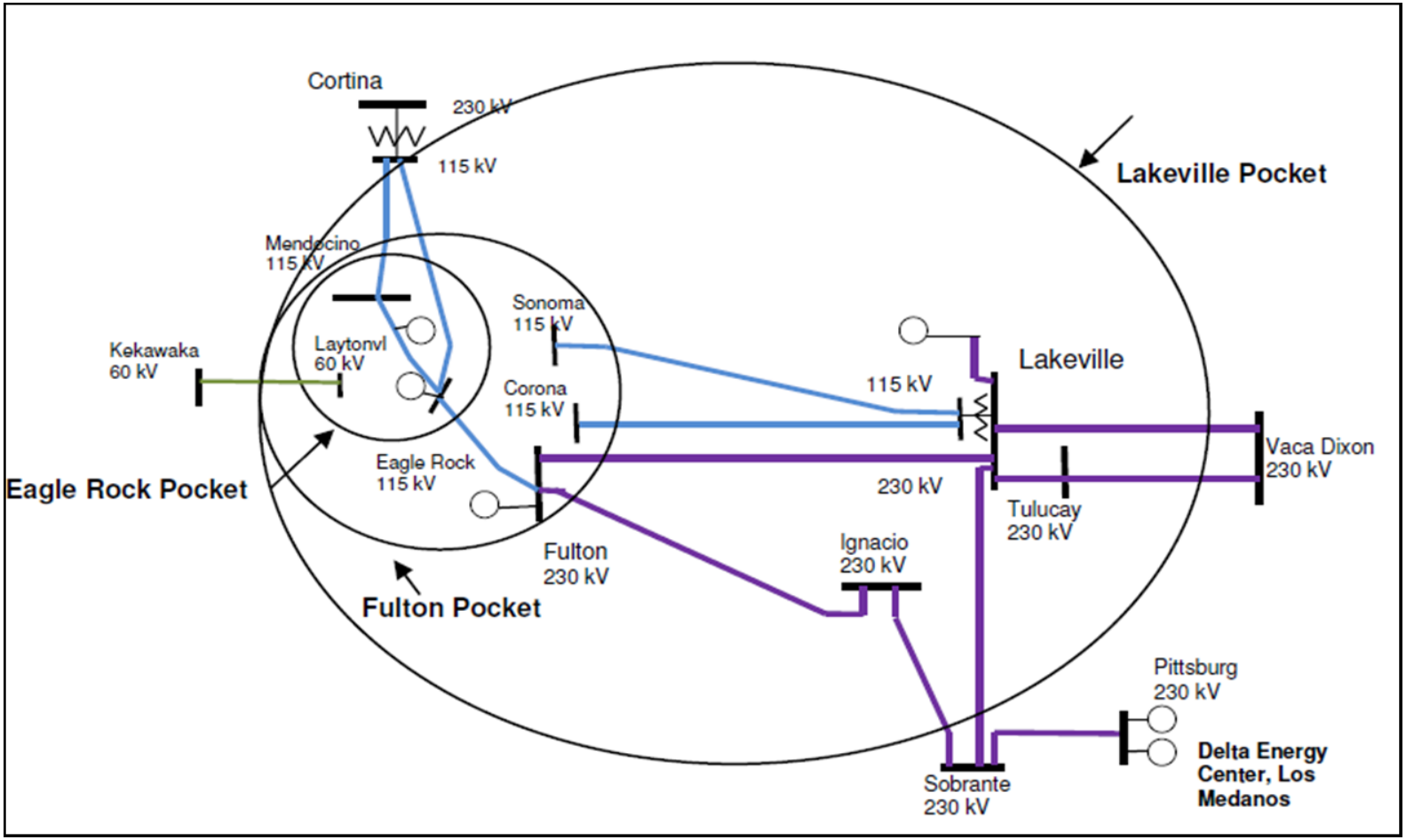

Major transmission projects

Project Name	Expected ISD
Vaca Dixon-Lakeville 230 kV Corridor Series Compensation	Oct 2025
Tulucay-Napa #2 60 kV Line Capacity Increase	Dec 2026

Resource Additions:

- No new resource additions

Resource Retirements:

- No new retirements

Eagle Rock Sub-area Load and Resources

Load (MW)		Generation (MW)	
Gross Load	260	Market	275
AAEE	-6	Solar	0
Behind the meter DG	0	Muni	2
Net Load	**254**	QF	0
Transmission Losses	15	Future preferred resource and energy storage	0
		Existing 20-minute Demand Response	0
Pumps	0	**Total Qualifying Capacity**	**277**
Load + Losses + Pumps	**269**		

Eagle Rock Sub-Area: One-line diagram

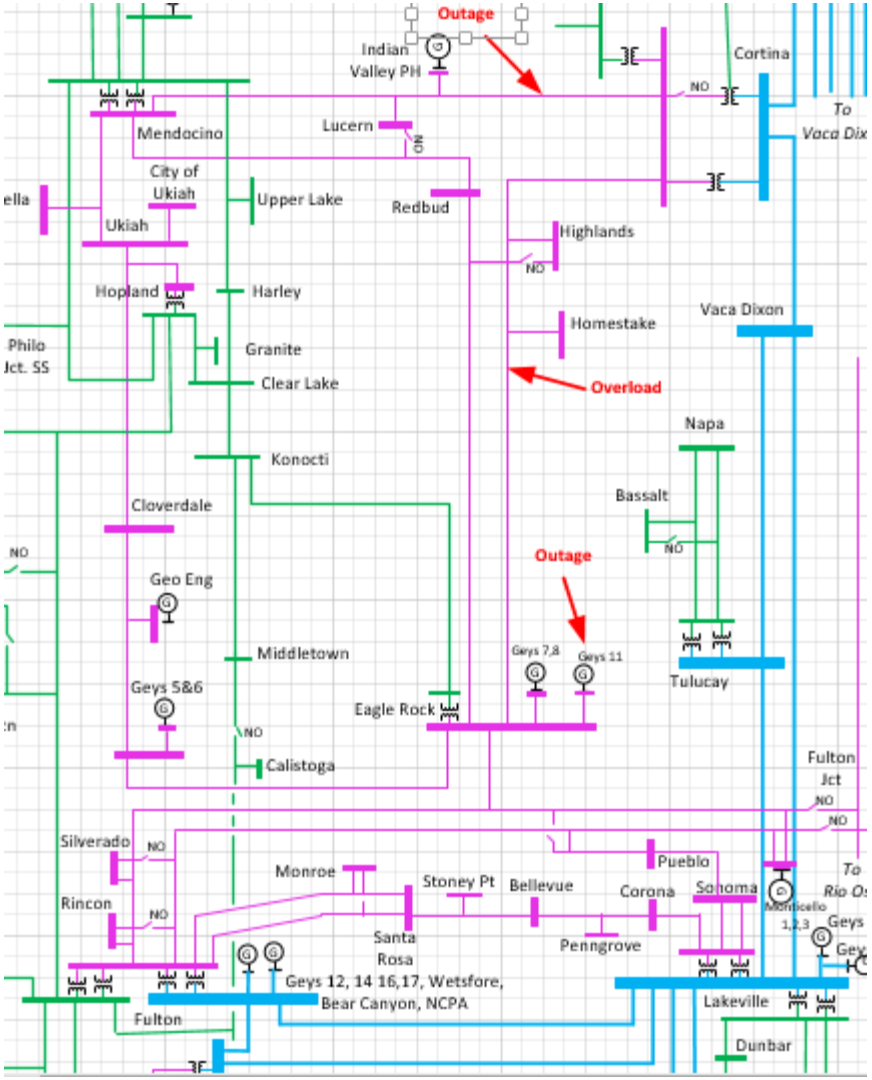

Eagle Rock Sub Area Requirements

Year	Limit	Category	Limiting Facility	Contingency	LCR (MW) (Deficiency)
2032	First Limit	P3	Thermal overload on Eagle Rock-Cortina 115 kV line	Cortina-Mendocino 115 kV line with Geyser #11 unit out of service	257

Eagle Rock Sub Area Load Profiles

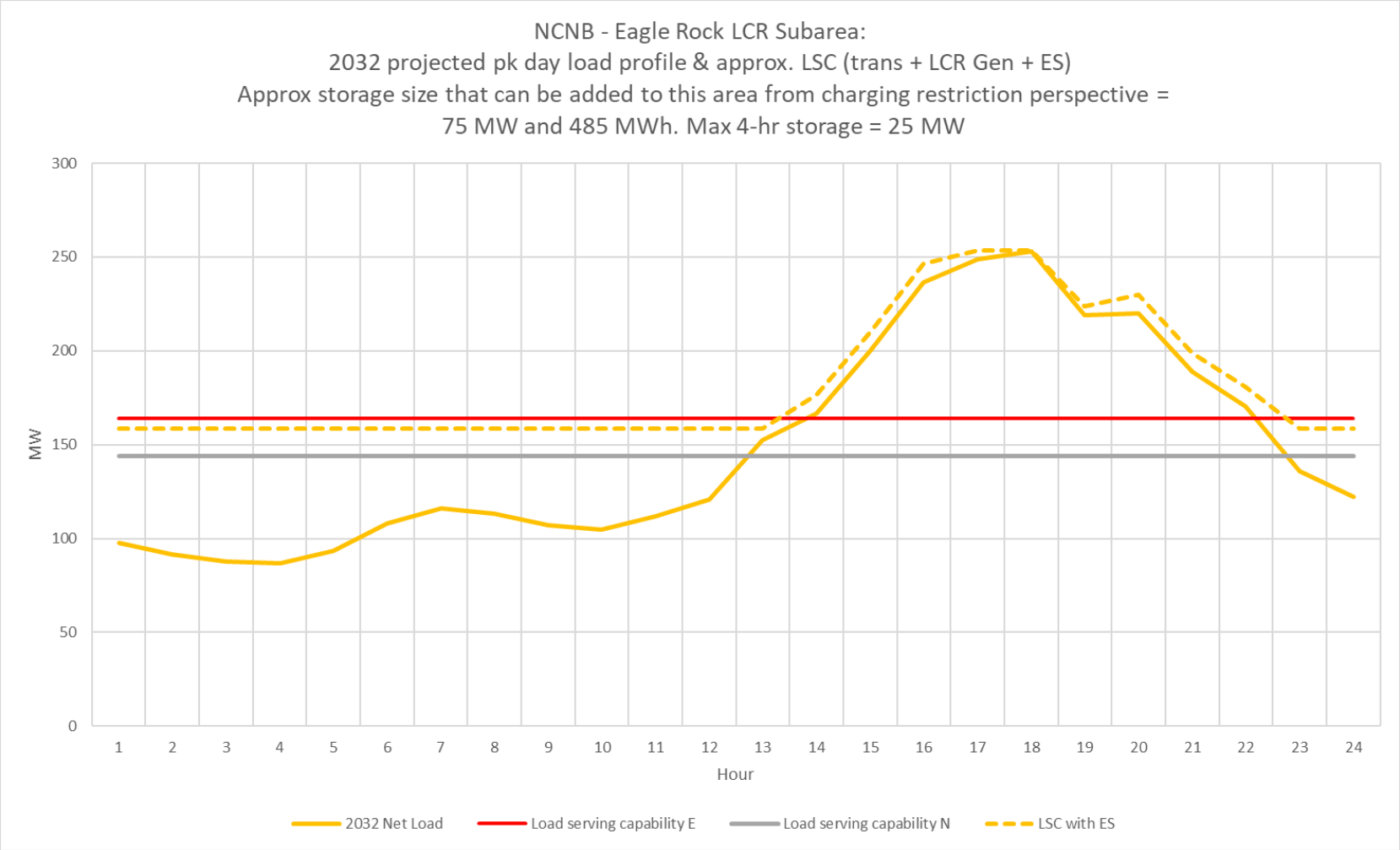

Fulton Sub-area Load and Resources

Load (MW)		Generation (MW)	
Gross Load	911	Market	487
AAEE	-13	Wind	0
Behind the meter DG	0	Muni	54
Net Load	**898**	QF	5
Transmission Losses	37	Future preferred resource and energy storage	0
		Existing 20-minute Demand Response	0
Pumps	0	**Total Qualifying Capacity**	**546**
Load + Losses + Pumps	**935**		

Fulton Sub-Area: One-line diagram

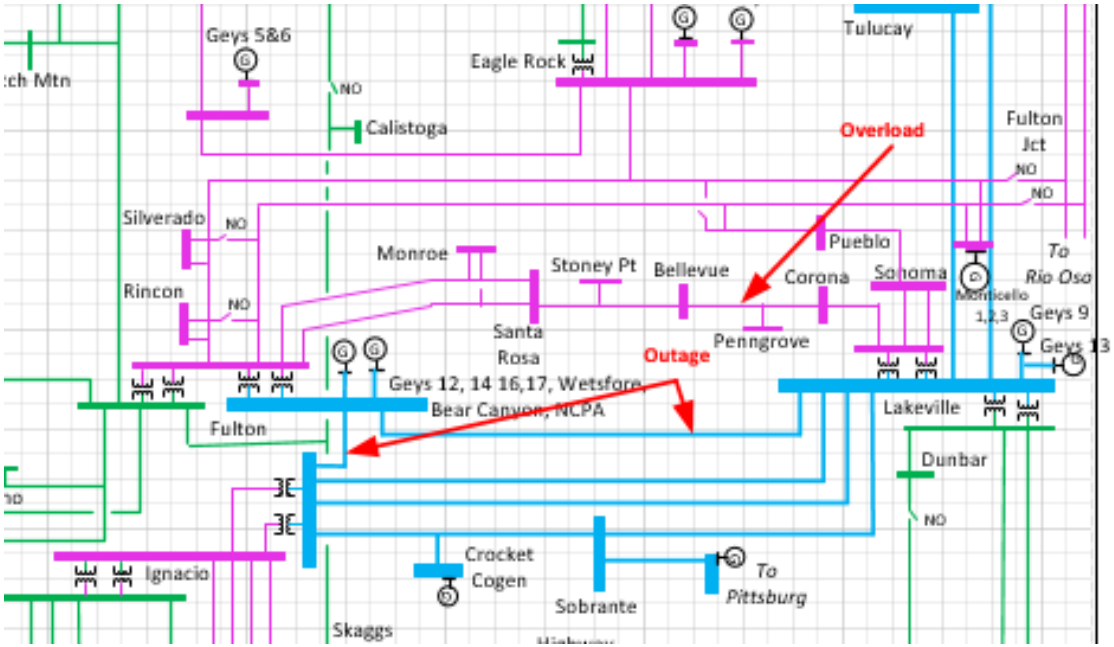

Fulton Sub-Area: Requirements

Year	Limit	Category	Limiting Facility	Contingency	LCR (MW) (Deficiency)
2032	First Limit	P6	Thermal overload on Corona-Penngrove 115kV Line	Fulton-Lakeville and Fulton-Ignacio 230 kV lines	380

Fulton Sub-area: Load Profiles

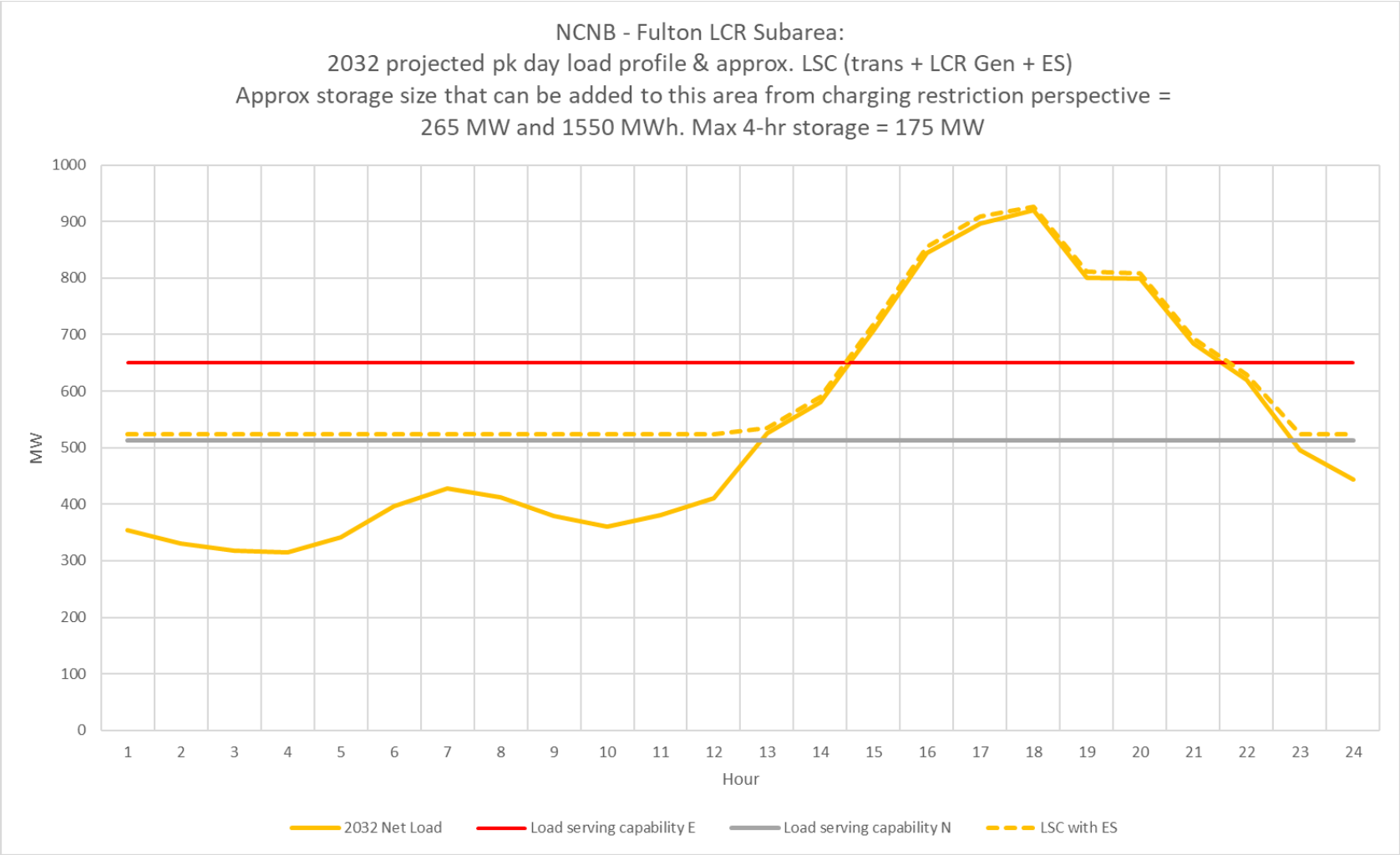

North Coast & North Bay Area Overall: Load and Resources

Load (MW)		Generation (MW)	
Gross Load	1812	Market	761
AAEE	-13	Wind	0
Behind the meter DG	0	Muni	133
Net Load	**1799**	QF	5
Transmission Losses	45	Future preferred resource and energy storage	0
		Existing 20-minute Demand Response	12
Pumps	0	**Total Qualifying Capacity**	**911**
Load + Losses + Pumps	**1854**		

NCNB Area: One-line diagram

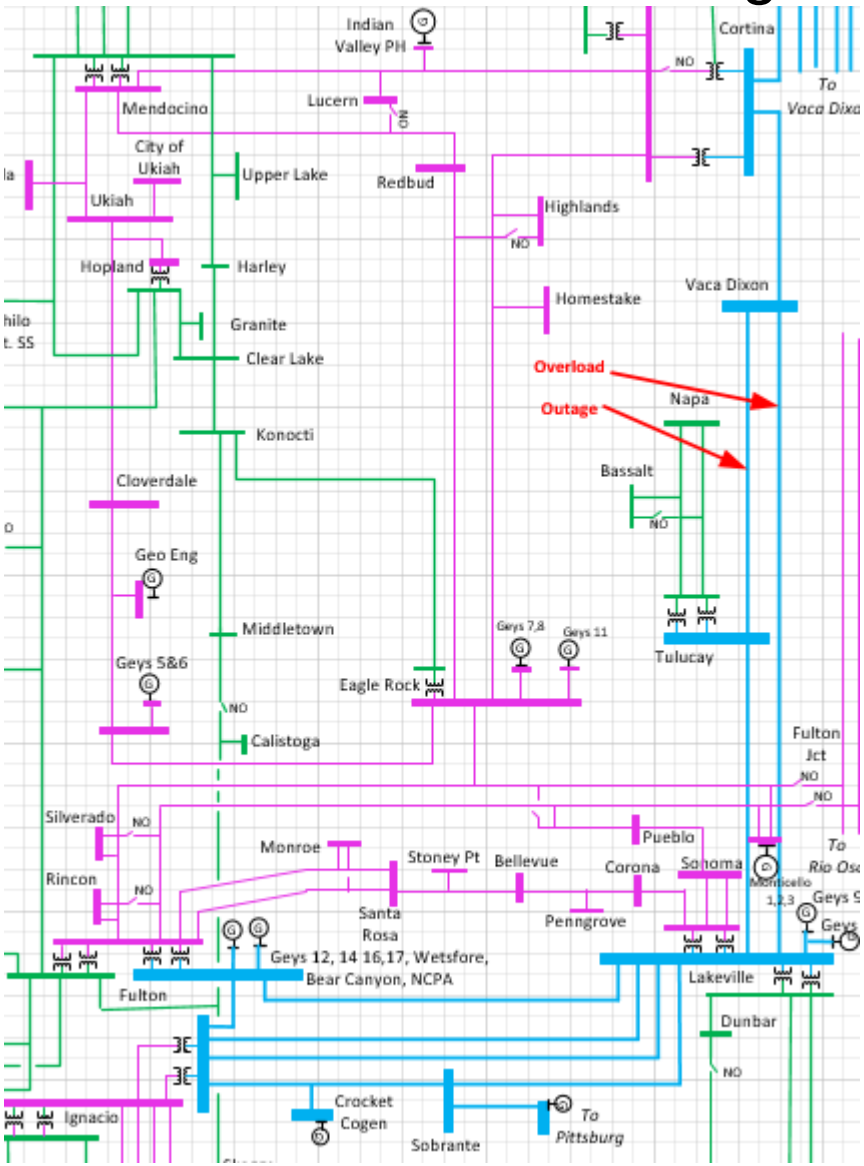

NCNB Overall Area Requirements

Year	#	Category	Limiting Facility	Contingency	LCR (MW) (Deficiency)
2032	First Limit	P3	Thermal overload on Vaca Dixon-Lakeville 230 kV line	Vaca Dixon-Tulucay 230 kV line with Delta Energy Center power plant out of service	1018 (107)

* = With the series reactor cut-in.

NCNB Overall Area : Load Profiles

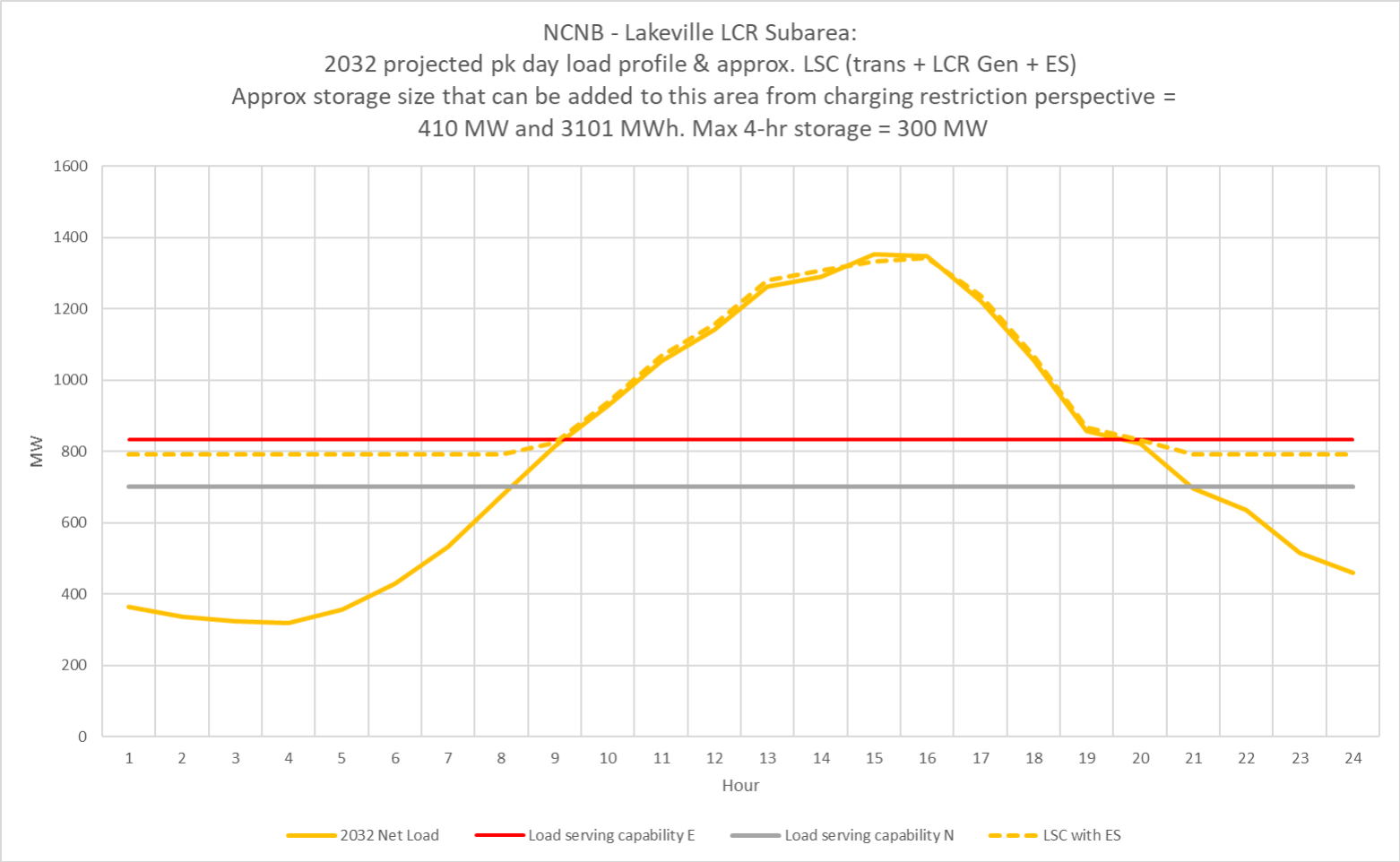

North Coast & North Bay Area Total Generation & LCR Need

Generation	Market (MW)	Wind (MW)	Muni (MW)	QF (MW)	DR (MW)	Total MW
2032	761	0	133	5	12	911

Year	LCR Need	Existing Generation Capacity Needed (MW)	Deficiency (MW)	Total MW Need
2032	P3	911	107	1018

Changes Compared to Previous LCR Requirements

Subarea	2027		2032	
	Load	LCR	Load	LCR
Eagle Rock	268	258	269	257
Fulton	924	378	935	380
Overall	1521	1025 (114)	1854	1018 (107)

2032 Draft Long-Term LCR Study Results Sierra Area

Subrina Sultana Noureen

Engineer, Regional Transmission – North

2022-2023 Transmission Planning Process Stakeholder Meeting

November 17, 2022

Sierra Area Transmission System & LCR Sub-areas

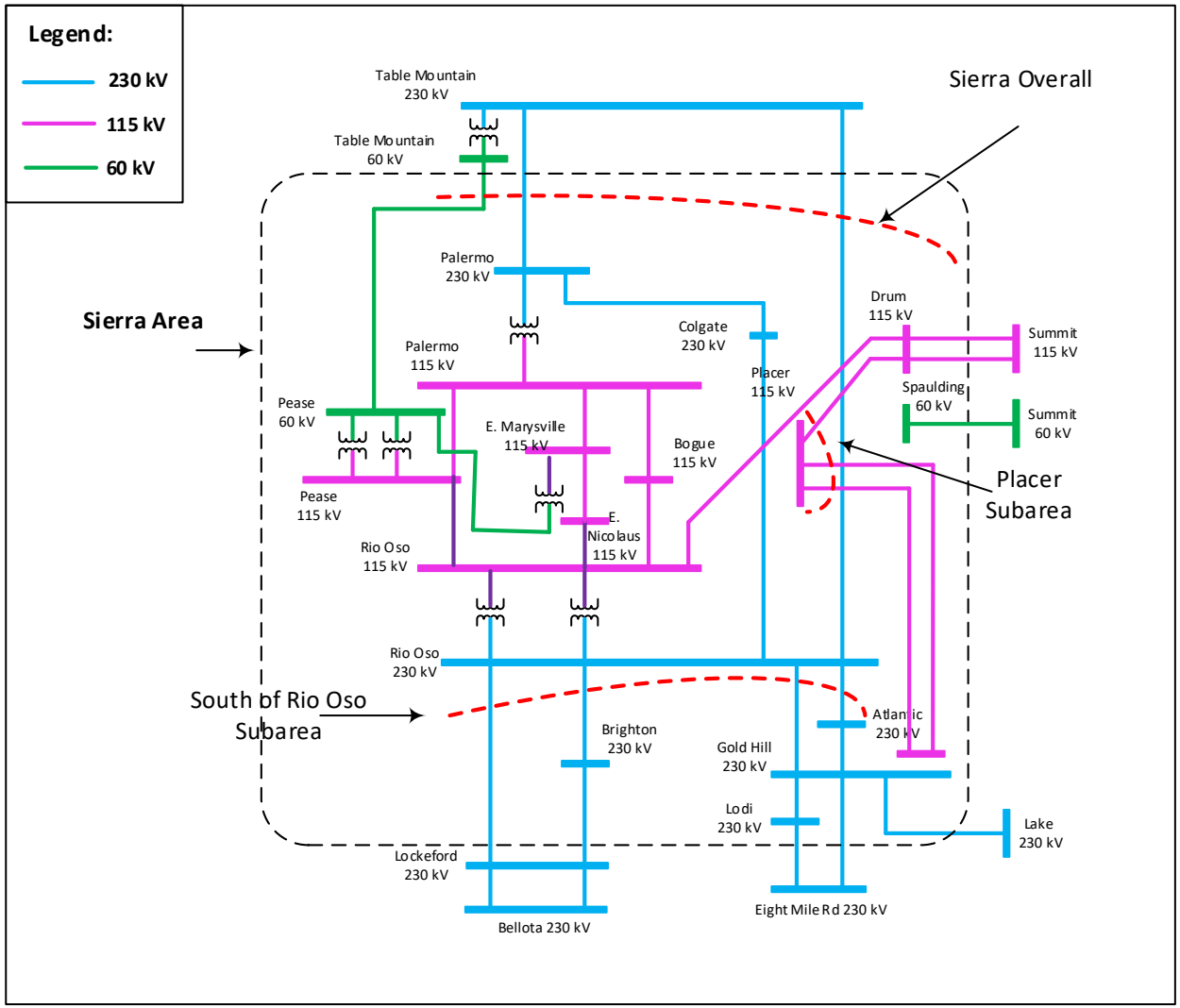

New major transmission projects

Project Name	Expected ISD
Rio Oso 230/115 kV Transformer Upgrades	Apr-24
Rio Oso Area 230 kV Voltage Support	Oct-24
East Marysville 115/60 kV	Nov-27
Gold Hill 230/115 kV Transformer Addition	Jun-28
Reconductor Rio Oso–SPI Jct–Lincoln 115kV line	2028
Atlantic 230/60 kV transformer voltage regulator	2026

Power Plant Changes

- Addition
  - Biomass/Biogas at Wyandotte
  - Biomass/Biogas at Placerville
  - Biomass/Biogas at Palermo
  - Biomass/Biogas at Higgins

Sierra Area Overall: Load and Resources

Load (MW)		Generation (MW)	
Gross Load	2035	Market/ Net Seller/ Battery	698
AAEE	14	Solar	5
Behind the meter DG	0	Wind	0
Net Load	**2021**	Muni	1156
Transmission Losses	83	QF	50
Pumps	0	Future preferred resource and energy storage	0
Load + Losses + Pumps	**2104**	**Total Qualifying Capacity**	**1909**

Placer Sub-Area: Requirements

Year	Category	Limiting Facility	Contingency	LCR (MW) (Deficiency)
2032	P6, P7	Drum – Higgins 115 kV line	Gold Hill – Placer #1 and #2 115 kV lines	168 (106)

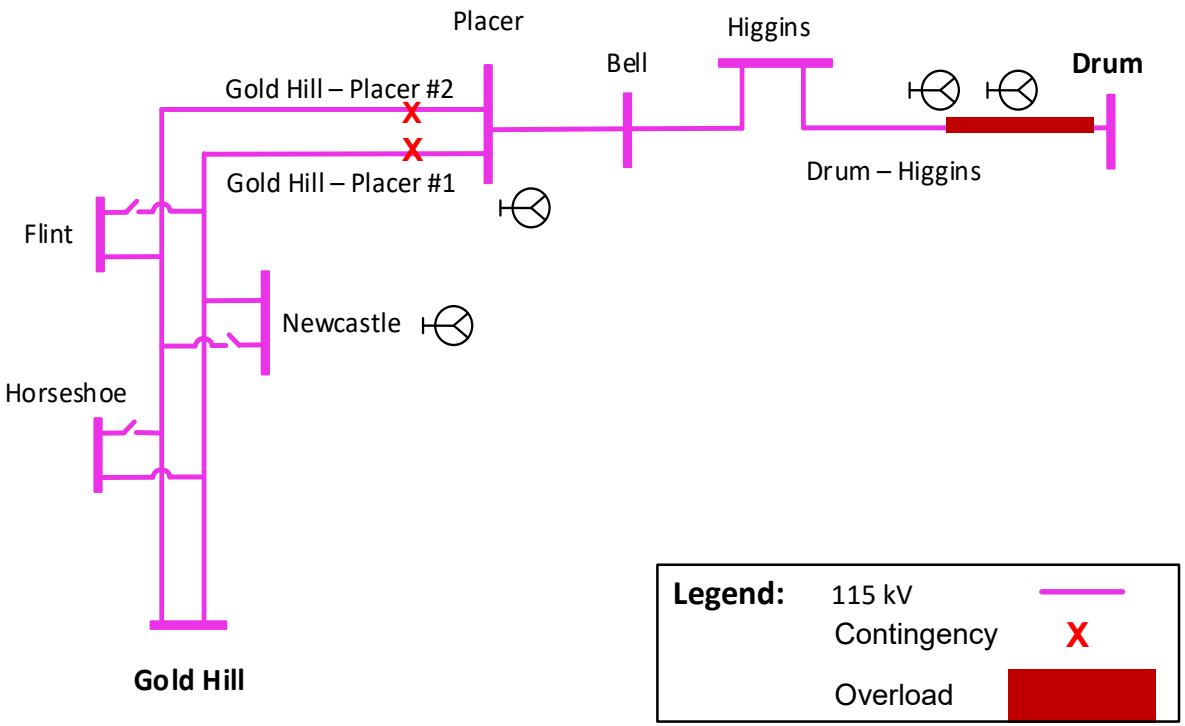

Placer Sub-area: Load Profiles

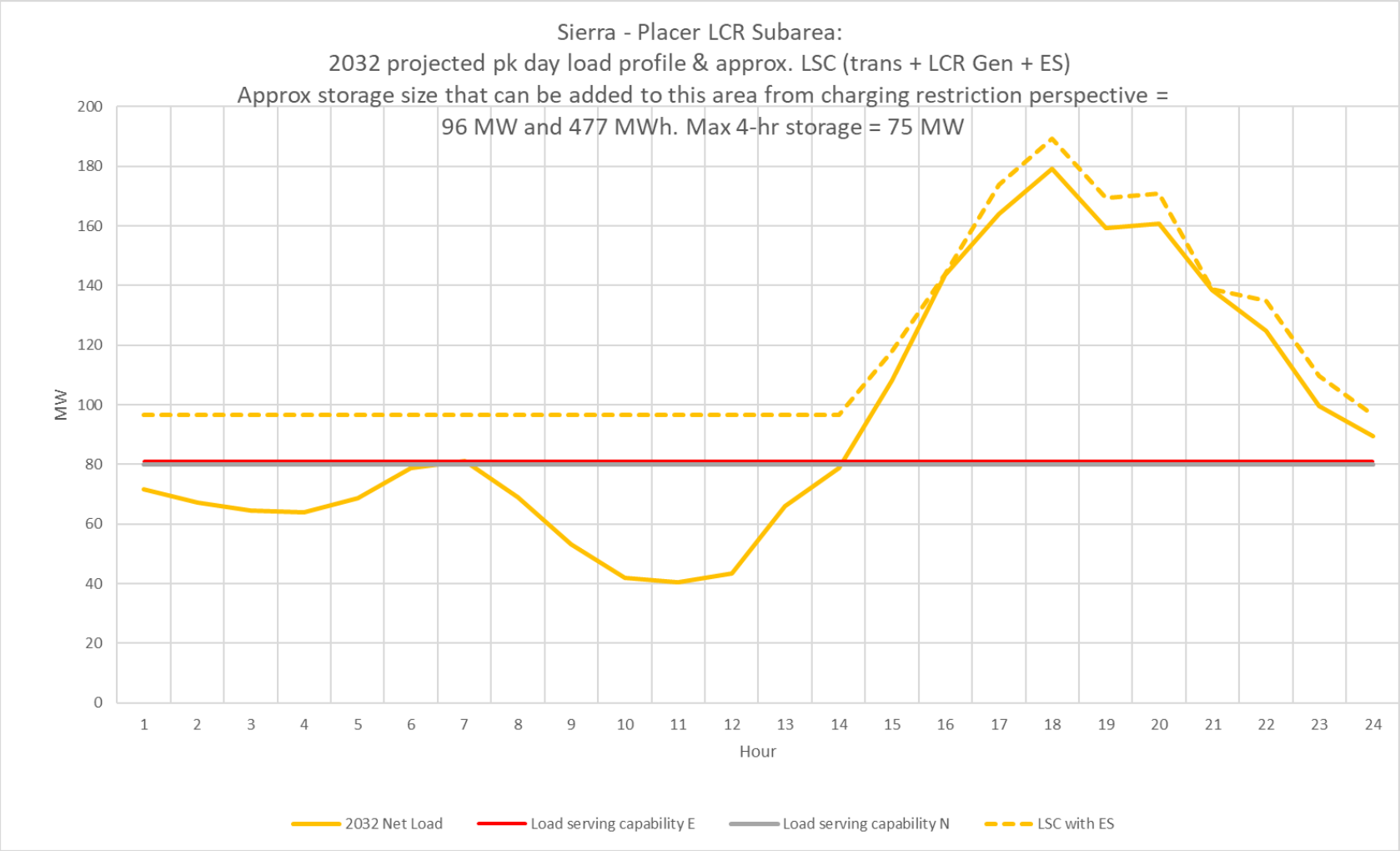

South of Rio Oso Sub-Area: Requirements

Year	Category	Limiting Facility	Contingency	LCR (MW) (Deficiency)
2032	P6	Rio Oso – Atlantic 230 kV Line	Rio Oso – Gold Hill 230 kV Rio Oso – Brighton 230 kV	261

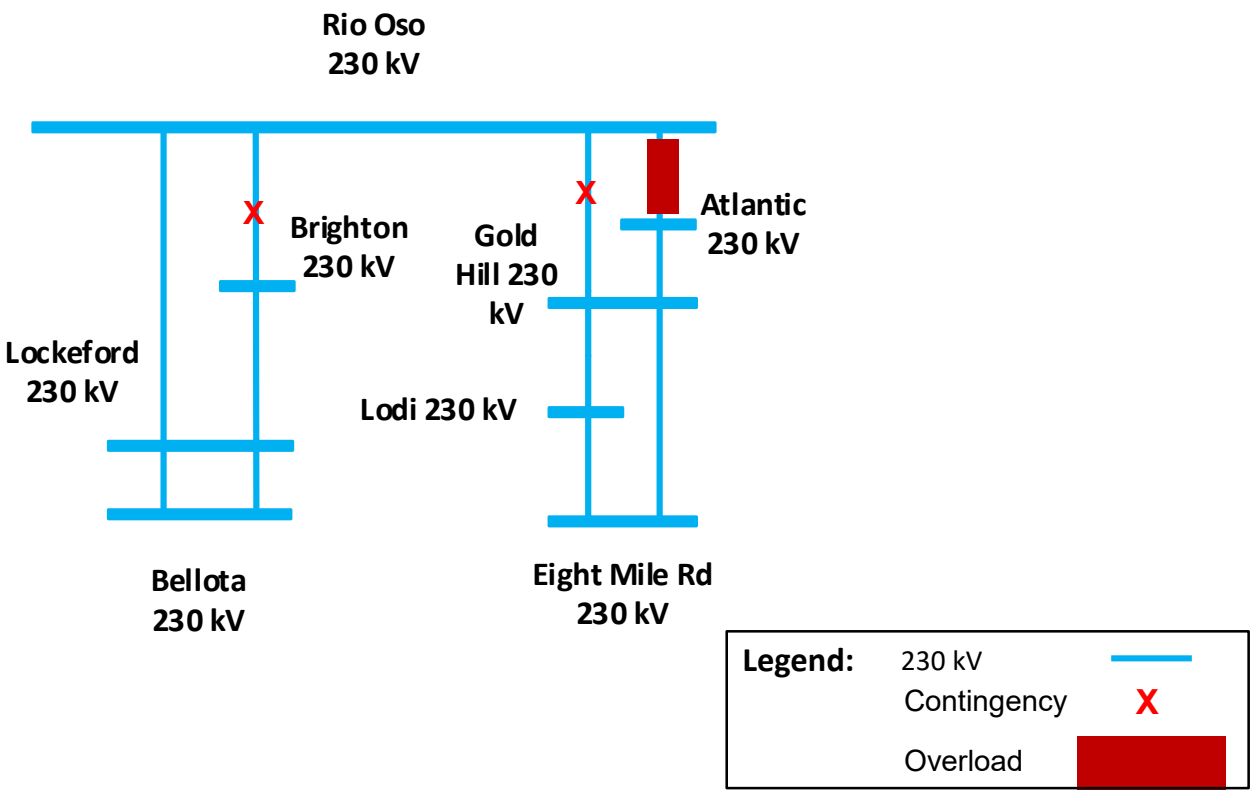

South of Table Mountain Sub-Area: Requirements

Year	Category	Limiting Facility	Contingency	LCR (MW) (Deficiency)
2032	P6, P7	Table Mountain – Pease 60 kV Line	DCTL of Table Mtn. – Palermo and Table Mtn. Rio Oso 230 kV lines	1450

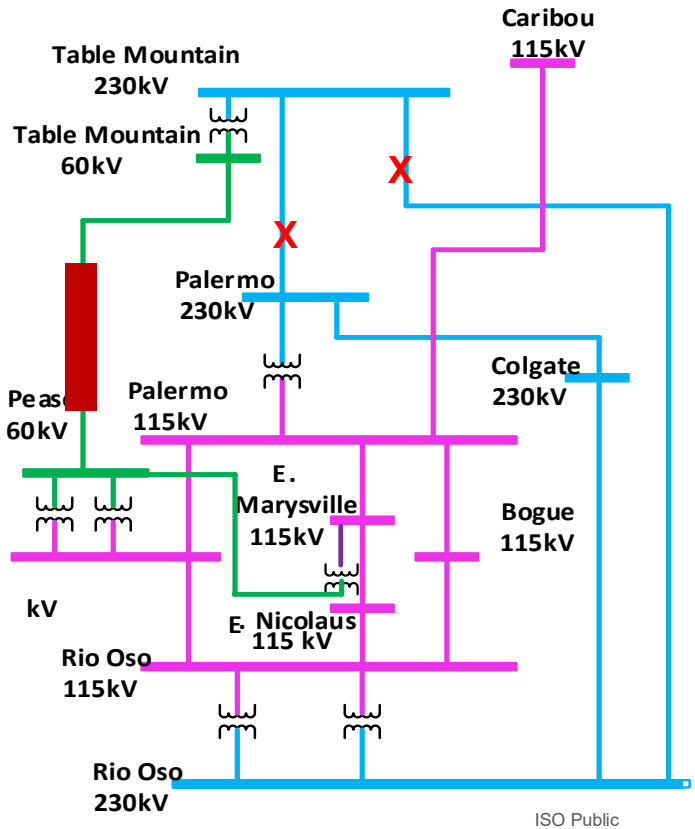

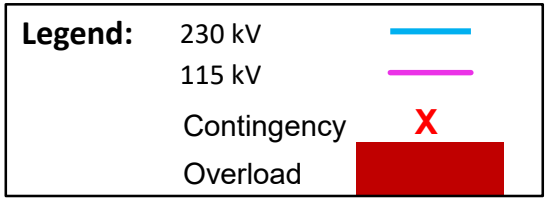

Changes from 2027 to 2032

Sub-area	2027		2032	
	Load	LCR	Load	LCR
Pease	163	92	N/A	0[1]
Placer	191	115	194	168 (106)
Gold Hill - Drum	528	425	N/A	0[2]
South of Rio Oso	N/A	353	N/A	261
South of Table Mountain	N/A	1,345	N/A	1,450

N/A=Flow-through area. No defined load pocket or not an LCR sub-area anymore

Note 1: There is no a LCR requirement in Peace sub-area after the implementation of East Marysville 115/60 kV Project

Note 2: There is no a LCR requirement in Gold Hill- Drum sub-area after the implementation of Gold Hill 230/115 kV Transformer Addition Project

Sierra Area Total LCR Need

Study Year	Existing Generation Capacity Needed (MW)	Deficiency (MW)	Total MW Need
2027	1,345	352	1,707
2032	1,450	106	1,556

California ISO

2032 Draft Long-Term LCR Study Results Stockton Area

Subrina Sultana Noureen

Engineer, Regional Transmission – North

2022-2023 Transmission Planning Process Stakeholder Meeting

November 17, 2022

New major transmission projects

Projects	Expected ISD
Mosher Transmission Project	Dec-27
Vierra 115 kV Looping Project	Jun-25
Tesla 230 kV Bus Series Reactor	Aug-23
Lockeford-Lodi Area 230 kV Development	Jul-27
Kasson – Kasson Junction 1 115 kV Line Section Reconductoring Project	Jun-27
Manteca #1 60 kV Line Section Reconductoring Project	Jun-27
Manteca-Ripon-Riverbank-Melones Area 115 kV Line Reconductoring Project	2028
Weber-Mormon Jct Line Section Reconductoring Project	2027

Stockton Area Transmission System & LCR Sub-areas

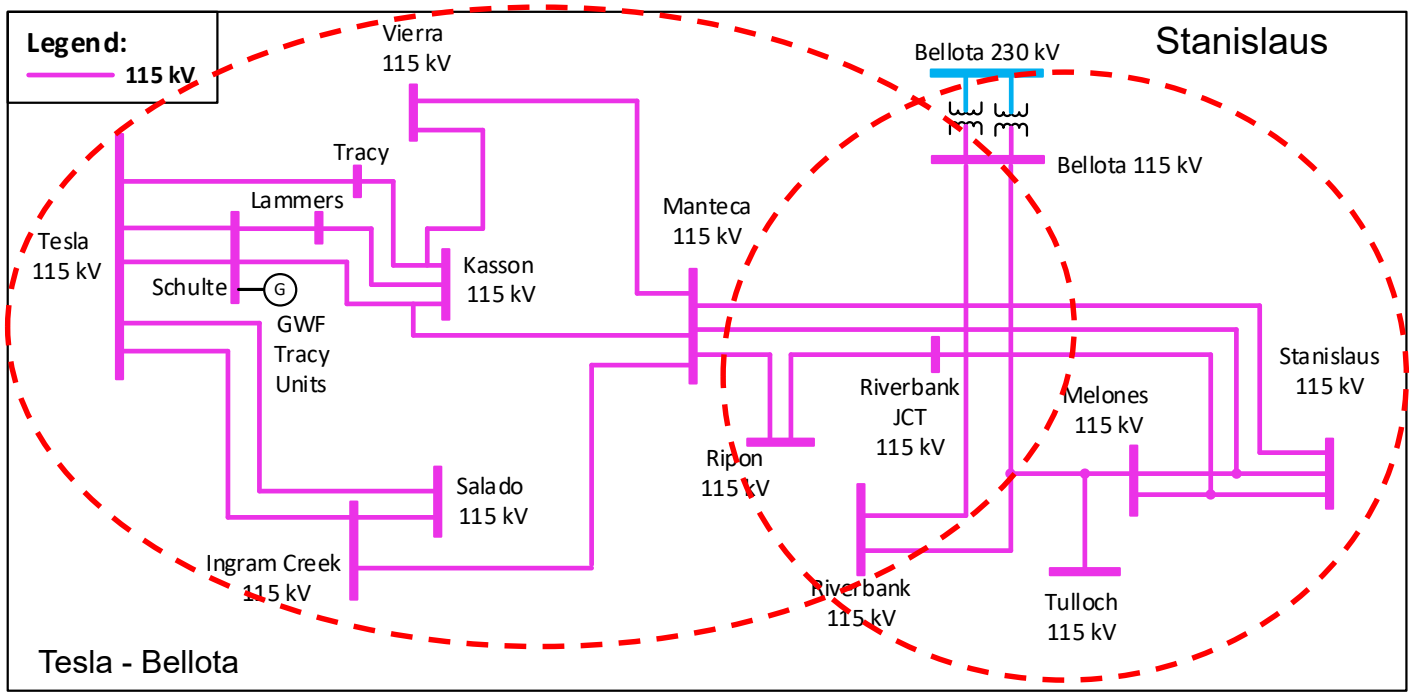

Power plant changes

- Addition
  - Biomass/Biogas at Curtis
  - Biomass/Biogas at Bellota
  - Battery at Bellota
  - Q1350 SPV and BESS
  - Q1109

Stockton Area Overall: Load and Resources

Load (MW)	2032	Generation (MW)	2032
Gross Load	1033	Market/ Net Seller	462
AAEE	-5	Solar	18
Behind the meter DG	0	Muni	136
Net Load	**1028**	QF	0
Transmission Losses	22	Battery	10
Pumps	0	Mothballed	0
Load + Losses + Pumps	**1050**	**Total Qualifying Capacity**	**626**

Stanislaus Sub-Area Requirements

Year	Category	Limiting Facility	Contingency	LCR (MW) (Deficiency)
2032	P3	VIERRA 115 kV – MANTECA 115 kV	Stanislaus - Melones Sw 115 kV Line and STANISLS	204 (32)

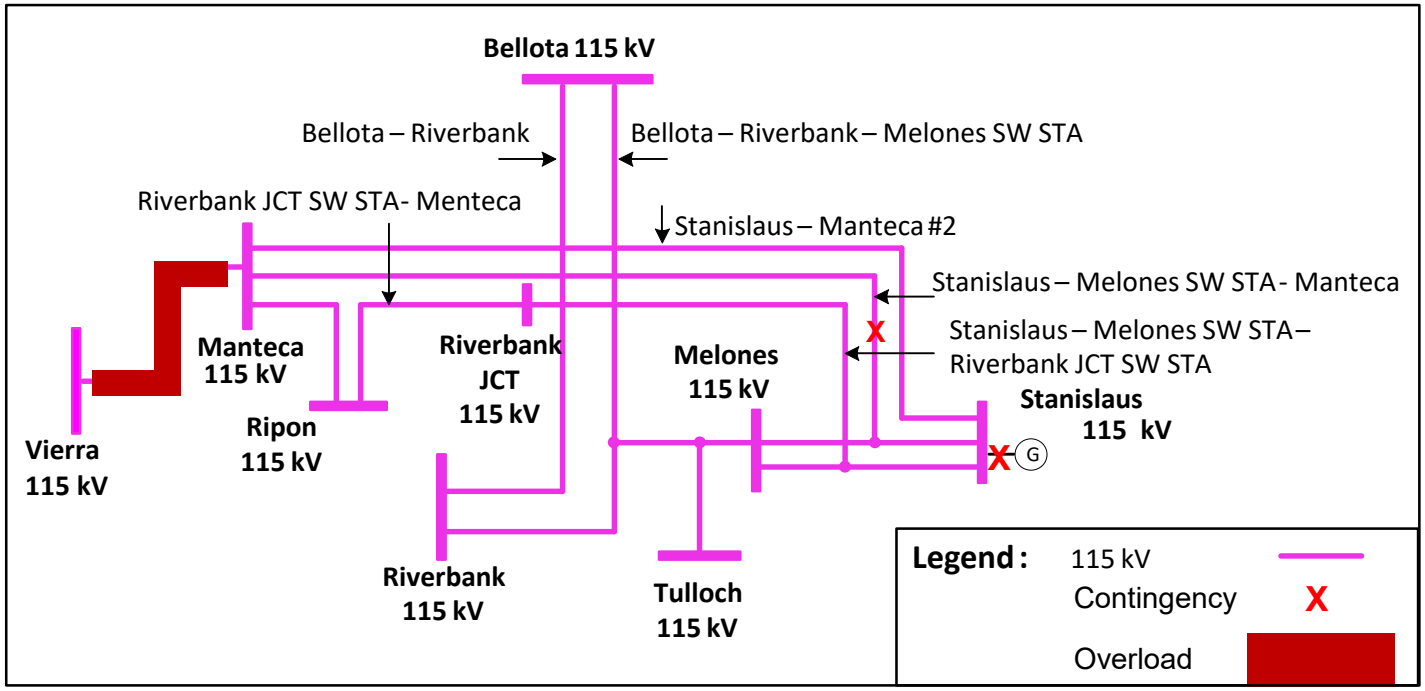

Tesla - Bellota Sub-Area Requirements

Year	Category	Limiting Facility	Contingency	LCR (MW) (Deficiency)
2032	P2-4	Melones–Riverbank-Bellota 115 kV	P2-4:A11:10:_TESLA 115KV - SECTION 2D & 1D	785 (265)
2032	P6	Tesla – Tracy 115 kV	Schulte - Lammers 115 kV Line and Schulte - Kasson - Manteca 115 kV Line	960 (439)
Total LCR Need in 2032				1225 (439)

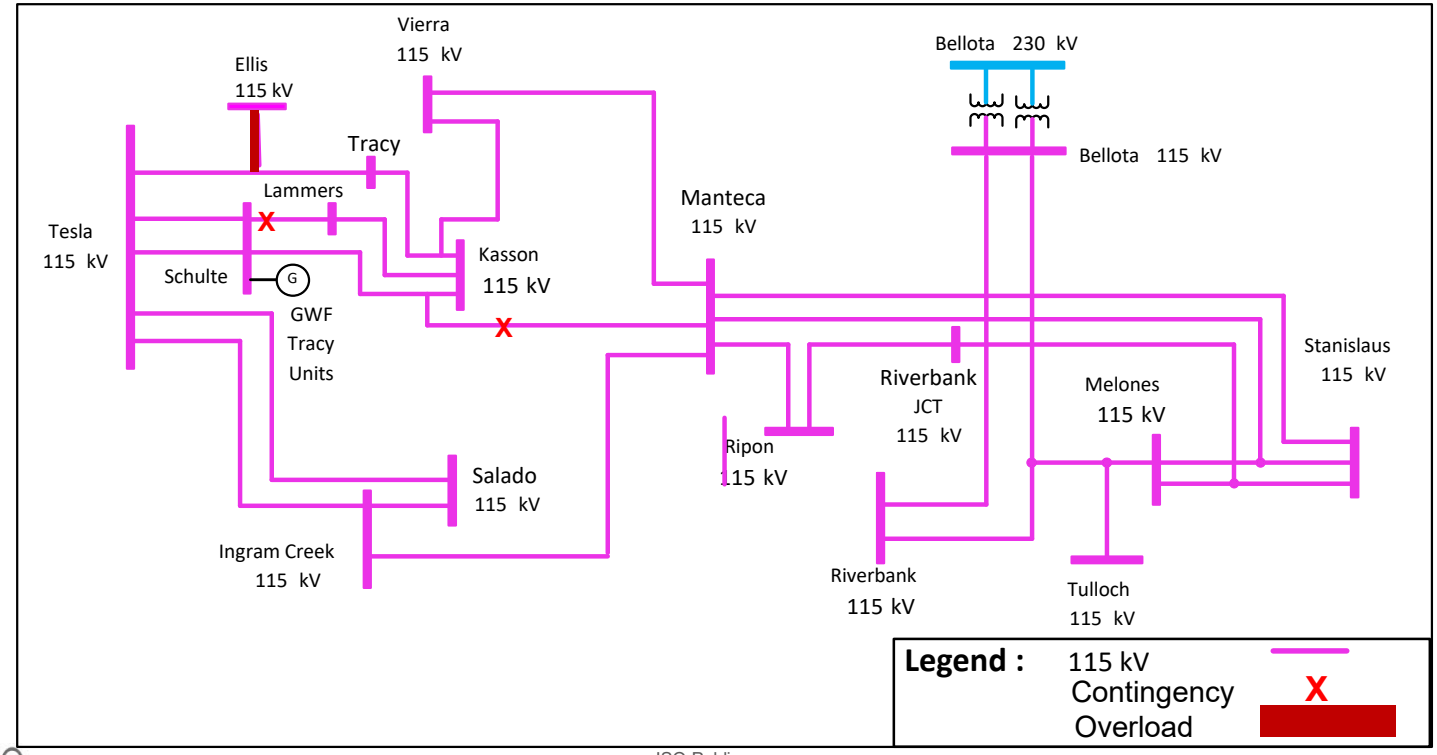

Tesla - Bellota Sub-area: Load Profiles

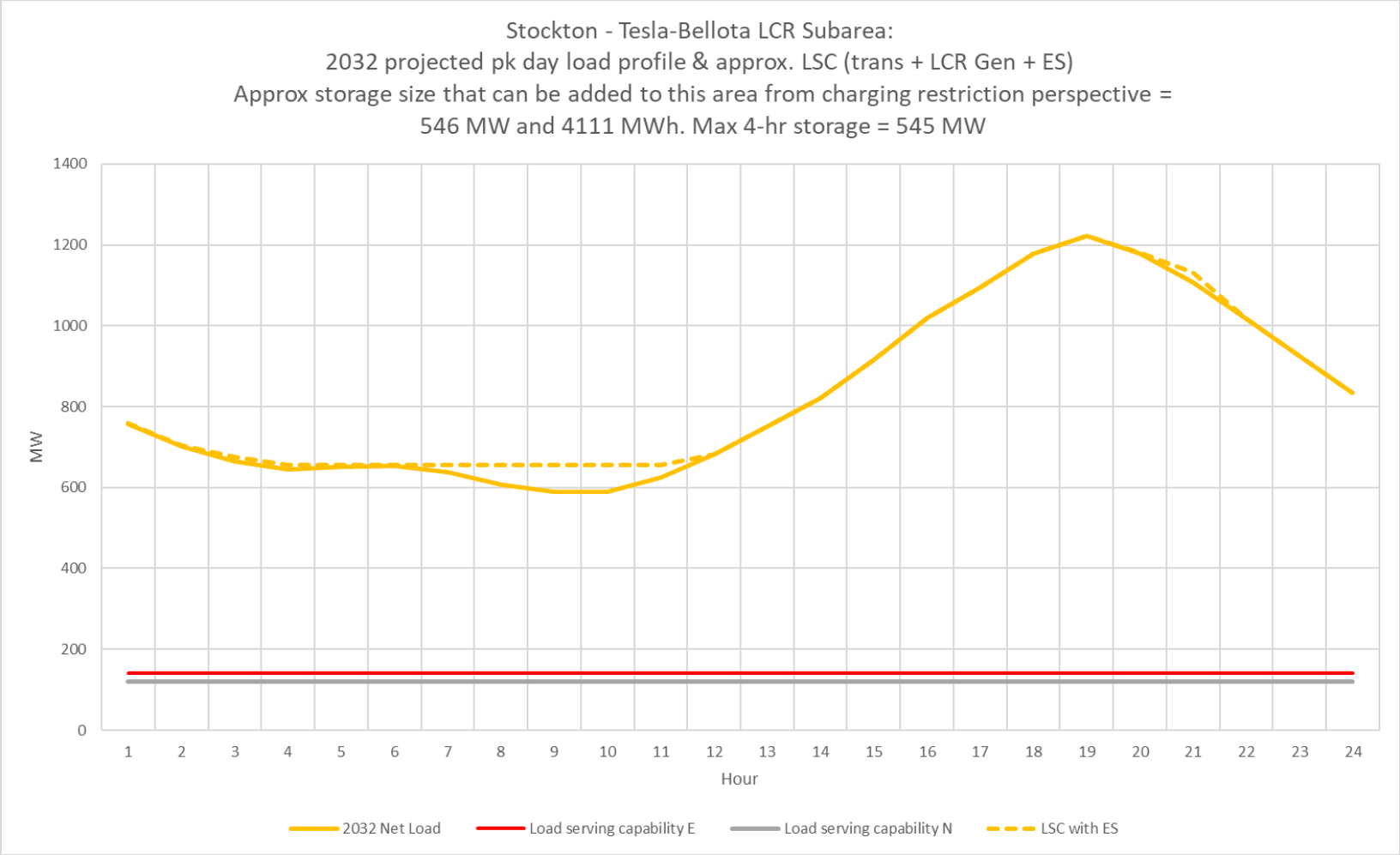

Load Change

Sub-area	2023		2027		2032	
	Load	LCR	Load	LCR	Load	LCR
Lockeford	181	27	N/a	0	N/A	0
Stanislaus	N/A	155	N/A	177	N/A	204
Tesla - Bellota	909	965	951	953	1033	1225
Total	1,090	992	1,147	953	1033	1225

- There is no a LCR requirement in Lockeford sub-area after the implementation of the Lockeford – Lodi 230 kV Area 230 kV Project
- The Tesla 115kV Bus upgrade will address some of the LCR requirements in Tesla- Bellota Area

N/A=Flow-through area. No defined load pocket or not an LCR sub-area anymore

Stockton Area Total LCR Need

Study Year	Existing Generation Capacity Needed (MW)	NQC Deficiency (MW)	Total MW Need
2027	555	398	953
2032	626	599*	1225

* = Deficiency numbers – subject to change after finalization of NQC totals

2032 Draft Long-Term LCR Study Results Greater Fresno Area

Preethi Rondla

Senior Engineer, Regional Transmission – North

2022-2023 Transmission Planning Process Stakeholder Meeting

November 17, 2022

Greater Fresno Area
Electrical Boundaries

Electrical Boundaries:

- Gates – Mustang #1 230 kV line
- Gates – Mustang #2 230 kV line
- Panoche – Tranquility #1 230 kV line
- Panoche – Tranquility #2 230 kV line
- Warnerville – Wilson 230 kV line
- Melones – Wilson 230 kV line
- Panoche 230/115 kV transformer #1
- Panoche 230/115 kV transformer #2
- Smyrna – Alpaugh – Corcoran 115 kV line
- Los Banos #3 230/70 kV transformer
- Los Banos #4 230/70 kV transformer
- San Miguel – Coalinga #1 70 kV line
- Gates 230/70 kV transformer #5

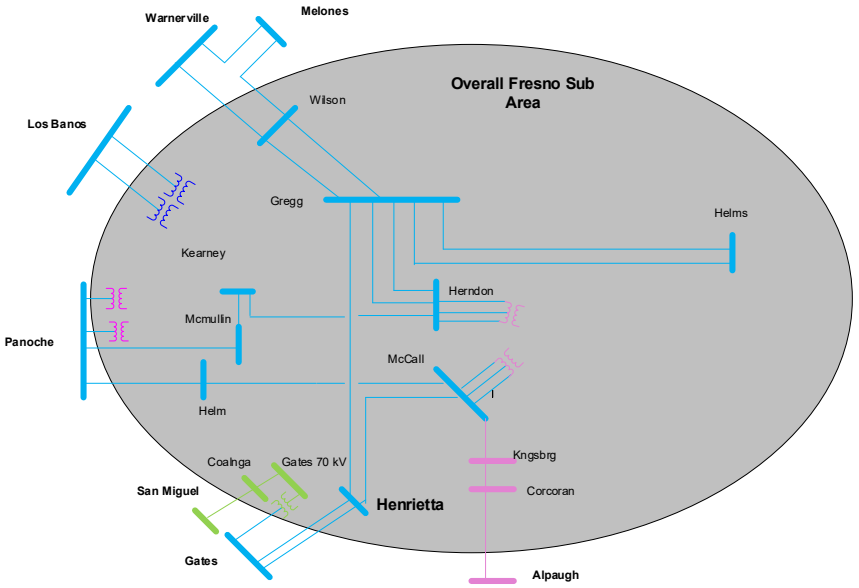

New major transmission projects

Project Name	Expected ISD
Panoche-Oro Loma 115 kV Reconductoring	Q4-2022
Wilson 115 kV Area Reinforcement	Q1-2028
Oro Loma 70 kV Area Reinforcement	Q4-2026
Giffen Line Reconductoring	Q1-2024
Borden 230/70 kV Transformer Bank #1 Capacity Increase	Q4-2027
Wilson-Oro Loma 115 kV Line Reconductoring	Q2-2028
Bellota-Warnerville 230kV Reconductoring	Q2-2024
Herndon - Bullard Nos. 1 and 2 115 kV Reconductoring	Q4-2026
Reedley 70 kV Reinforcement (Renamed to Reedley 70 kV Area Reinforcement Projects Include Battery at Dinuba)	Q4-2025
Coppermine 70 kV Reinforcement Project	Q4-2027

Power plant changes

Resource Additions:

Portfolio Li_Battery at Gates
Portfolio Solar at Gates
Portfolio Biomass/Biogas at Gregg
Portfolio Li_Battery at Helm
Portfolio Solar at Helm
Portfolio Li_Battery at Henrietta
Portfolio Solar at Henrietta
Portfolio Li_Battery at Kettleman
Portfolio Li_Battery at McCall
Portfolio Solar at McCall
Portfolio Solar at Mendota
Portfolio Solar at Mustang
Portfolio Li_Battery at Tranquility
Portfolio Solar at Tranquility

Hanford Sub-area: Load and Resources

Load (MW)	2027	2032	Generation (MW)	2027	2032
Gross Load	201	233	Market, Net Seller	124	124
AAEE	-2	-3	MUNI	0	0
Behind the meter DG	0	0	QF	0	0
Net Load	**199**	**230**	Solar	61	61
Transmission Losses	7	6	Existing 20-minute Demand Response	0	0
Pumps	0	0	Mothballed	0	0
Load + Losses + Pumps	**206**	**236**	**Total Qualifying Capacity**	**185**	**185**

Hanford Sub-Area Requirements

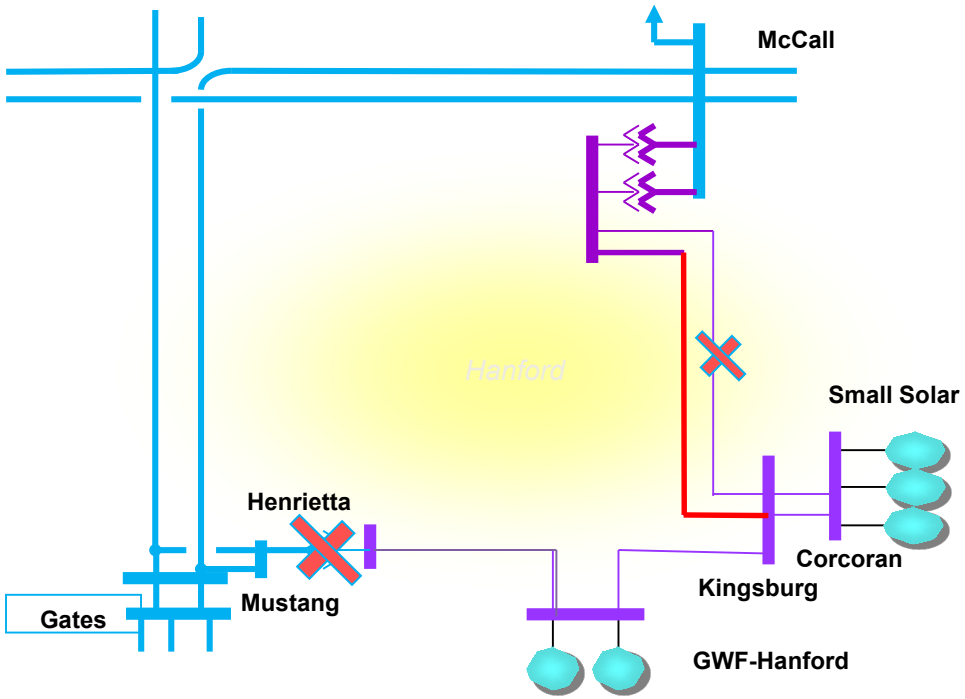

Limit	Category	Limiting Facility	Contingency	2027 LCR (MW)	2032 LCR (MW)
First Limit	P6	McCall-Kingsburg #2 115 kV Line	McCall-Kingsburg #1 115 kV line and Henrietta 230/115 kV TB#3	58	98

Hanford Sub-area: Load Profiles

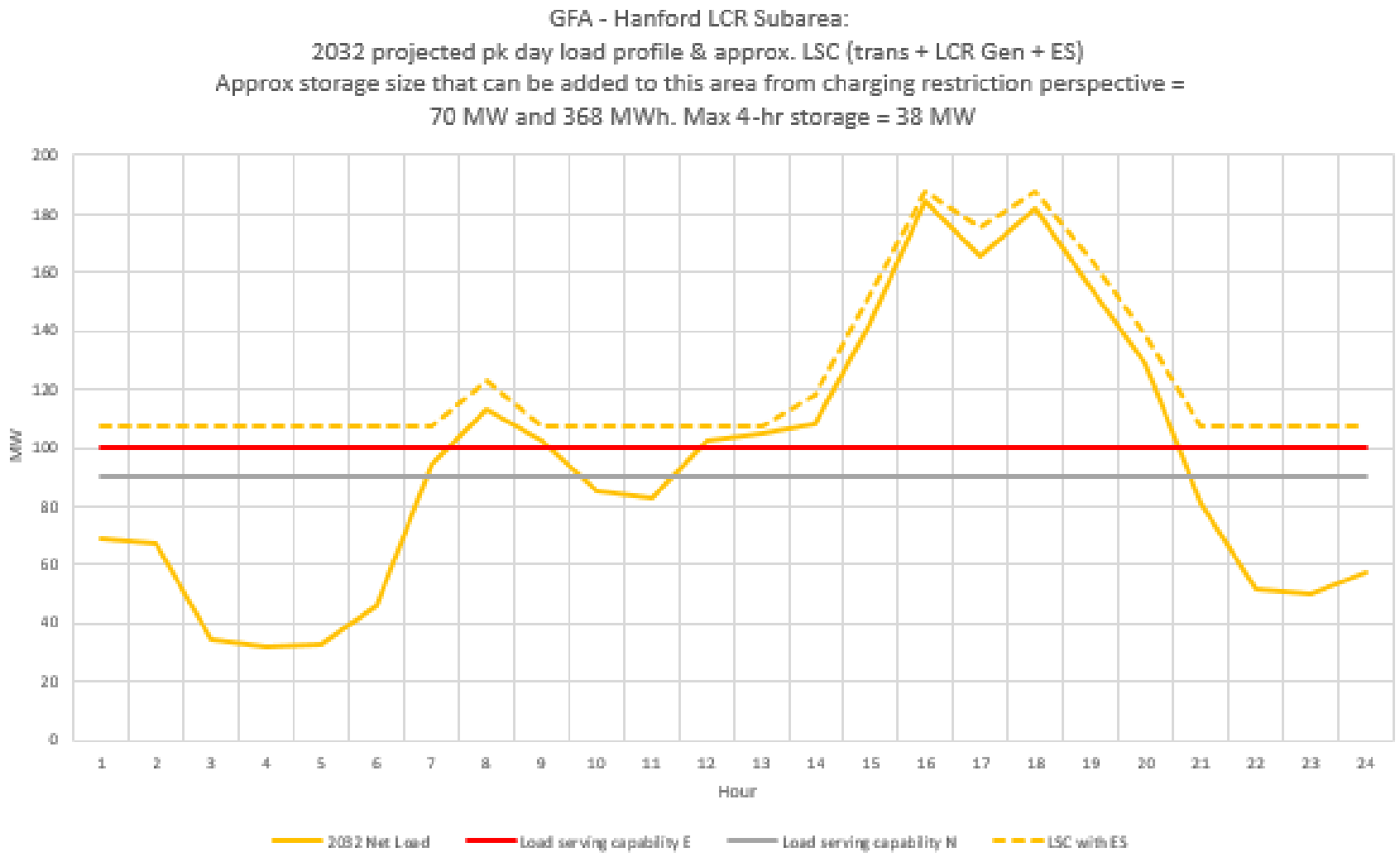

Coalinga Sub-area: Load and Resources

Load (MW)	2027	2032	Generation (MW)	2027	2032
Gross Load	115	162	Market, Net Seller	0	0
AAEE	-2	-2	MUNI	0	0
Behind the meter DG	0	0	QF	3	3
Net Load	**113**	**160**	Solar	25	25
Transmission Losses	2	5	Existing 20-minute Demand Response	0	0
Pumps	0	0	Mothballed	0	0
Load + Losses + Pumps	**115**	**165**	**Total Qualifying Capacity**	**28**	**28**

Coalinga Sub-Area Requirements

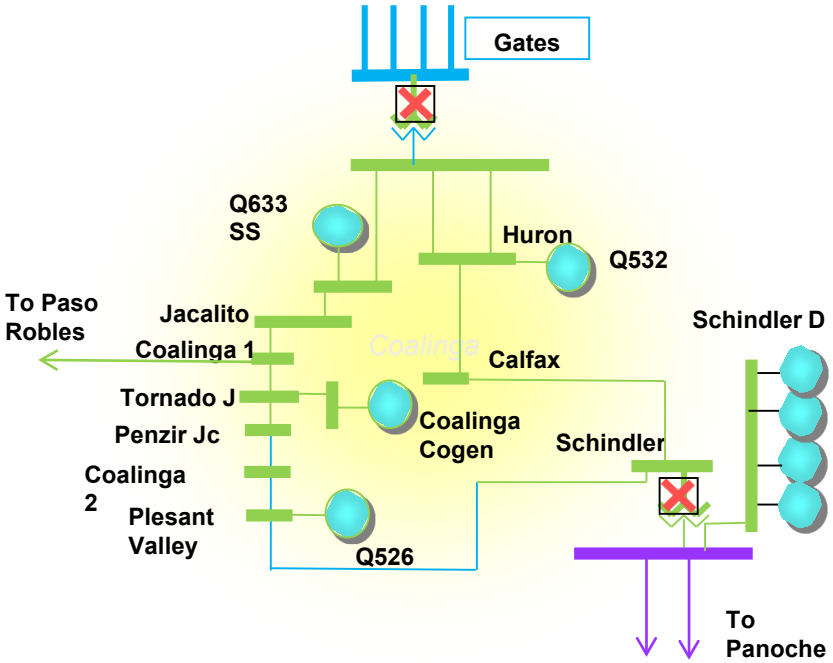

Limit	Category	Limiting Facility	Contingency	2027 LCR (MW)	2032 LCR (MW)
First Limit	P6	Overload on San-Miguel-Coalinga 70kV Line	T-1/T-1: Gates 230/70kV TB #5 and Schindler 115/70 kV TB#1	77 (74)	127 (124)

Coalinga Sub-area: Load Profiles

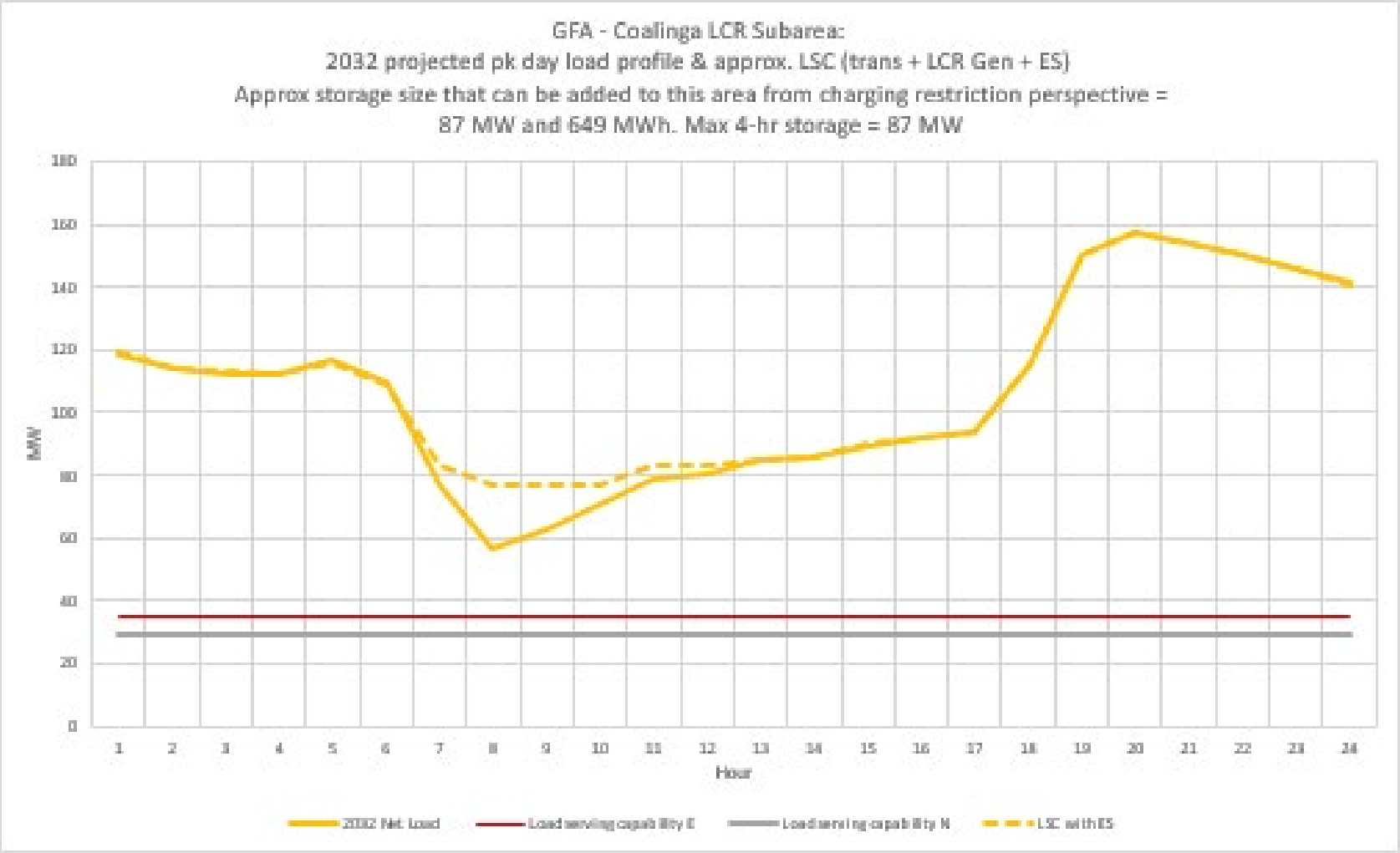

Borden Sub-area: Eliminated due to the Borden Transformer Capacity Increase Project

Reedley Sub-area: Load and Resources

Load (MW)	2027	2032	Generation (MW)	2027	2032
Gross Load	217	248	Market, Net Seller	37	37
AAEE	-3	-2	MUNI	0	0
Behind the meter DG	0	0	QF	0	0
Net Load	**214**	**246**	LTPP Preferred Resources	0	0
Transmission Losses	34	48	Existing 20-minute Demand Response	0	0
Pumps	0	0	Mothballed	0	0
Load + Losses + Pumps	**248**	**294**	**Total Qualifying Capacity**	**37**	**37**

Reedley Sub-Area Requirements

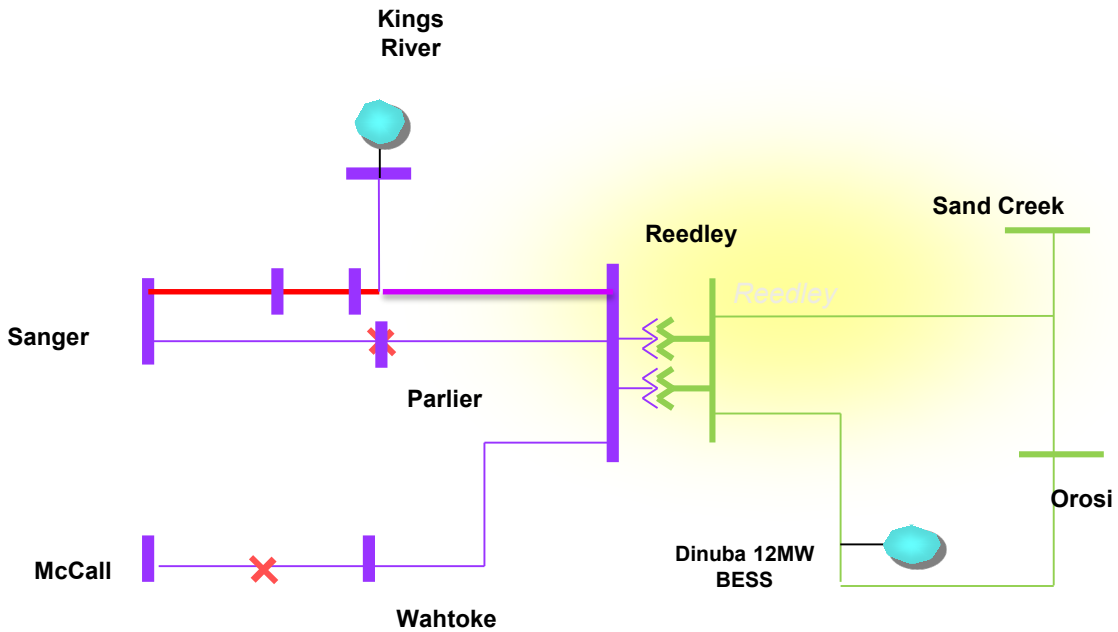

Limit	Category	Limiting Facility	Contingency	2027 LCR (MW)	2032 LCR (MW)
First Limit	P6	Kings River-Sanger-Reedley 115kV line with Wahtoke load online	McCall-Reedley 115kV Line & Sanger-Reedley 115kV line	134 (97)	166 (130)

Reedley Sub-area: Load Profiles

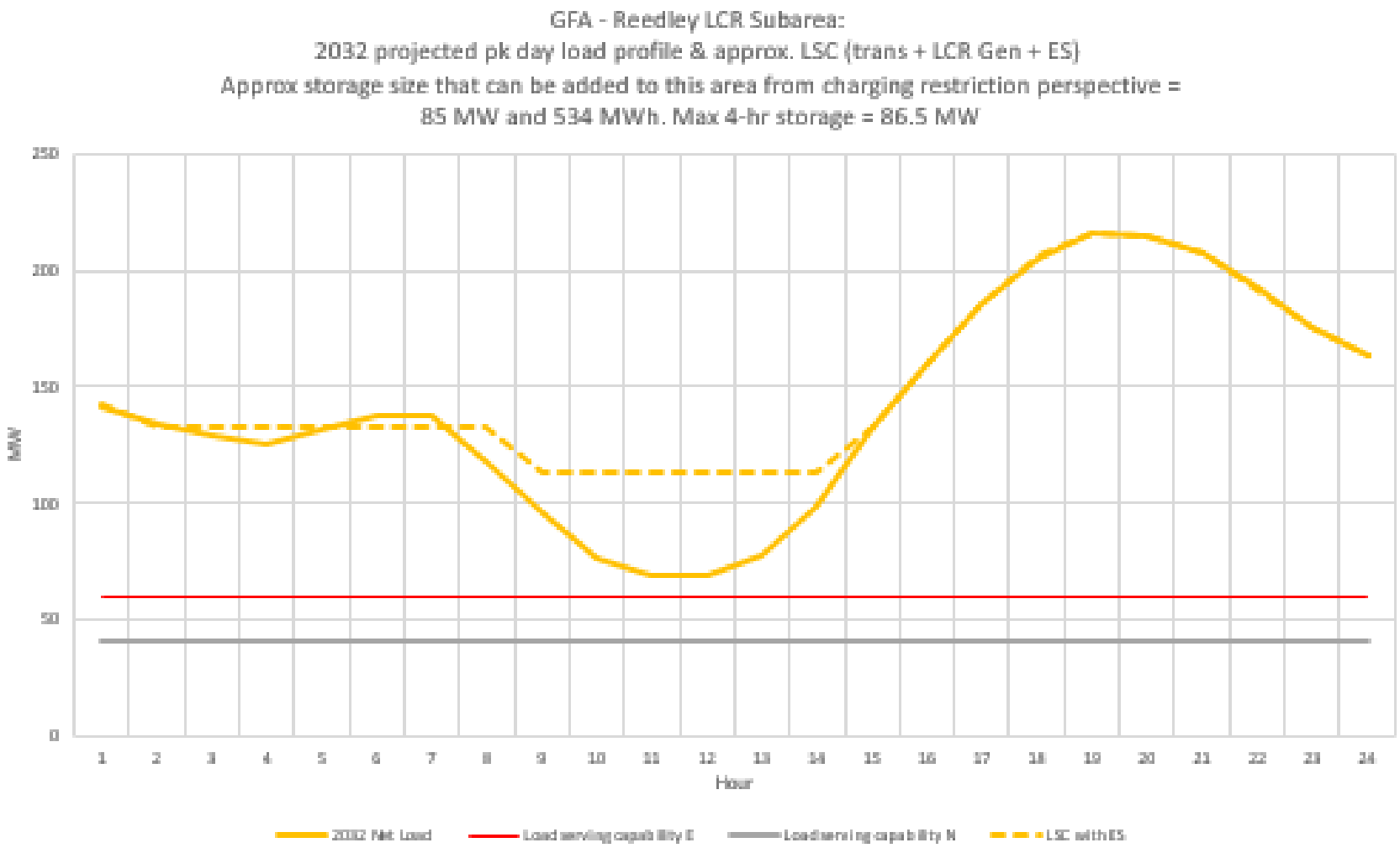

Panoche Sub-area: Load and Resources

Load (MW)	2027	2032	Generation (MW)	2027	2032
Gross Load	469	569	Market, Net Seller	282	282
AAEE	-6	-7	MUNI	100	100
Behind the meter DG	0	0	QF	3	3
Net Load	**463**	**562**	Solar	95	95
Transmission Losses	16	20	Existing 20-minute Demand Response	0	0
Pumps	0	0	Mothballed	0	0
Load + Losses + Pumps	**479**	**582**	**Total Qualifying Capacity**	**480**	**480**

Panoche Sub-Area Requirements

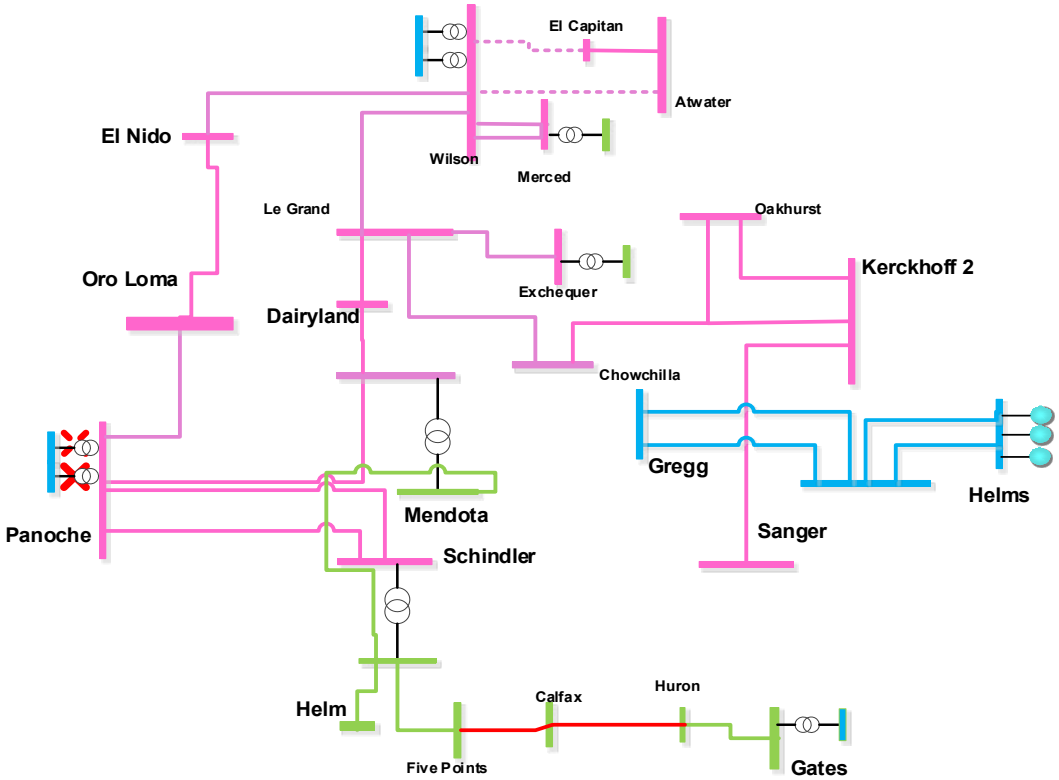

Limit	Category	Limiting Facility	Contingency	2027 LCR (MW)	2032 LCR (MW)
First Limit	P6	Five Points-Huron-Gates 70kV line	Panoche 230/115kV TB #2 and Panoche 230/115kV TB #4	383	486 (7)

Panoche Sub-area: Load Profiles

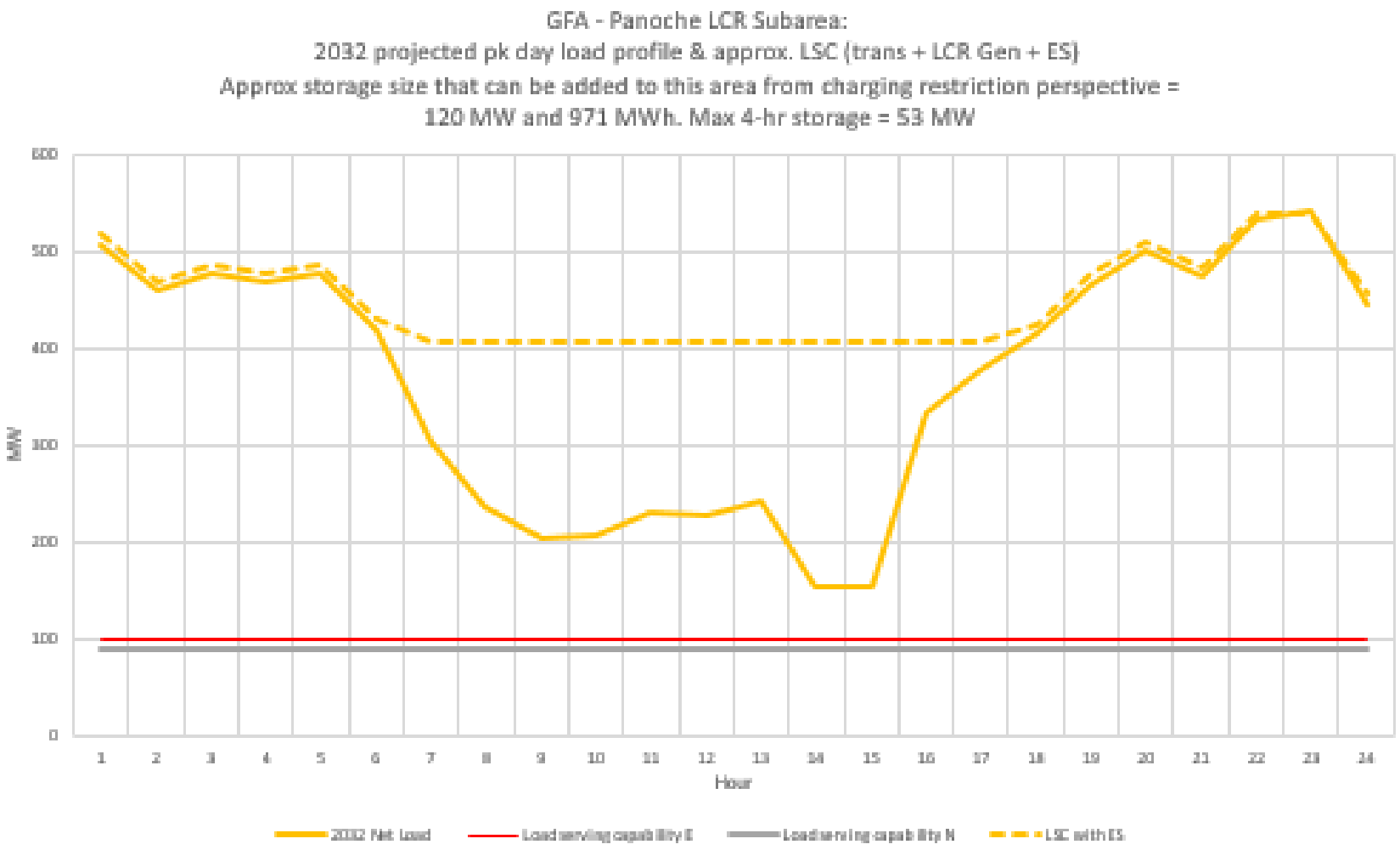

Wilson 115 kV Sub-area-Eliminated due to the 3rd Wilson 115/230kV Transformer coming into service with Wilson 115kV reinforcement project

Herndon Sub-area: Load and Resources

Load (MW)	2027	2032	Generation (MW)	2027	2032
Gross Load	1542	1718	Market, Net Seller	873	873
AAEE	-13	-15	MUNI	110	110
Behind the meter DG	0	0	QF	1	1
Net Load	**1529**	**1703**	Solar	63	63
Transmission Losses	29	34	Existing 20-minute Demand Response	0	0
Pumps	0	0	Mothballed	0	0
Load + Losses + Pumps	**1557**	**1737**	**Total Qualifying Capacity**	**1047**	**1047**

Herndon Sub-Area Requirements

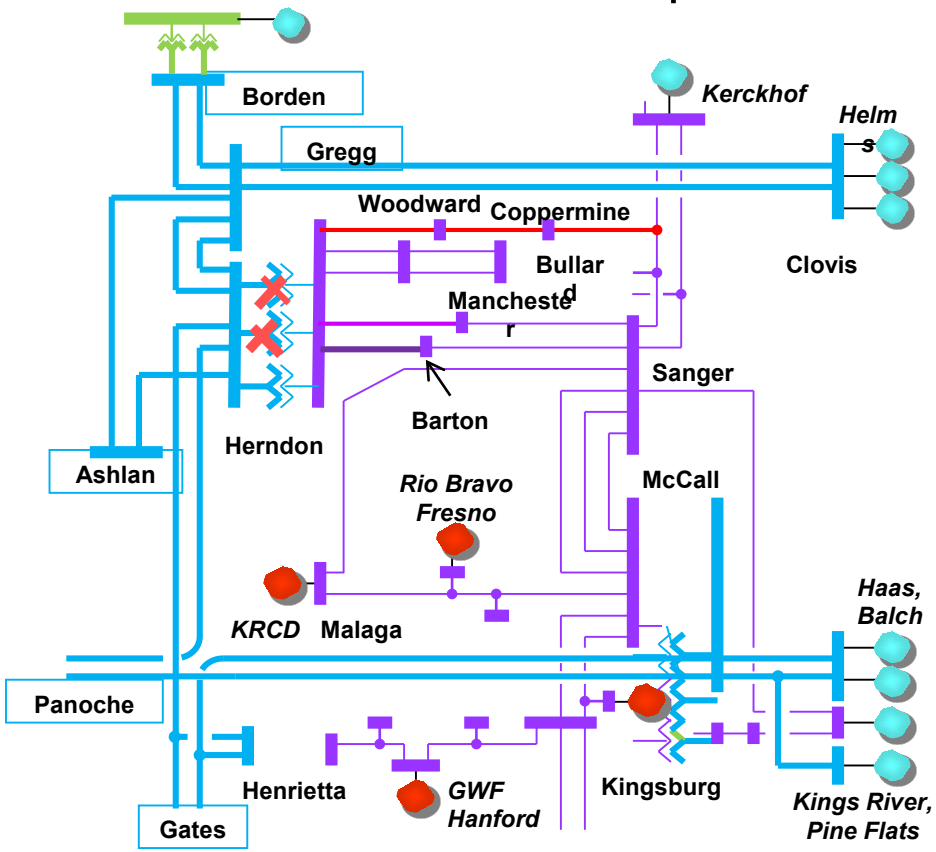

Limit	Category	Limiting Facility	Contingency	2027 LCR (MW)	2032 LCR (MW)
First limit	P6	Herndon-Woodward 115 kV line (2027) Herndon 230/115kV bank 3 (2032)	Herndon- Manchester 115 kV line and Herndon-Barton 115 kV line (2027) Herndon 230/115kV Bank 1 and Bank 2 (2032)	363	644

Herndon Sub-area: Load Profiles

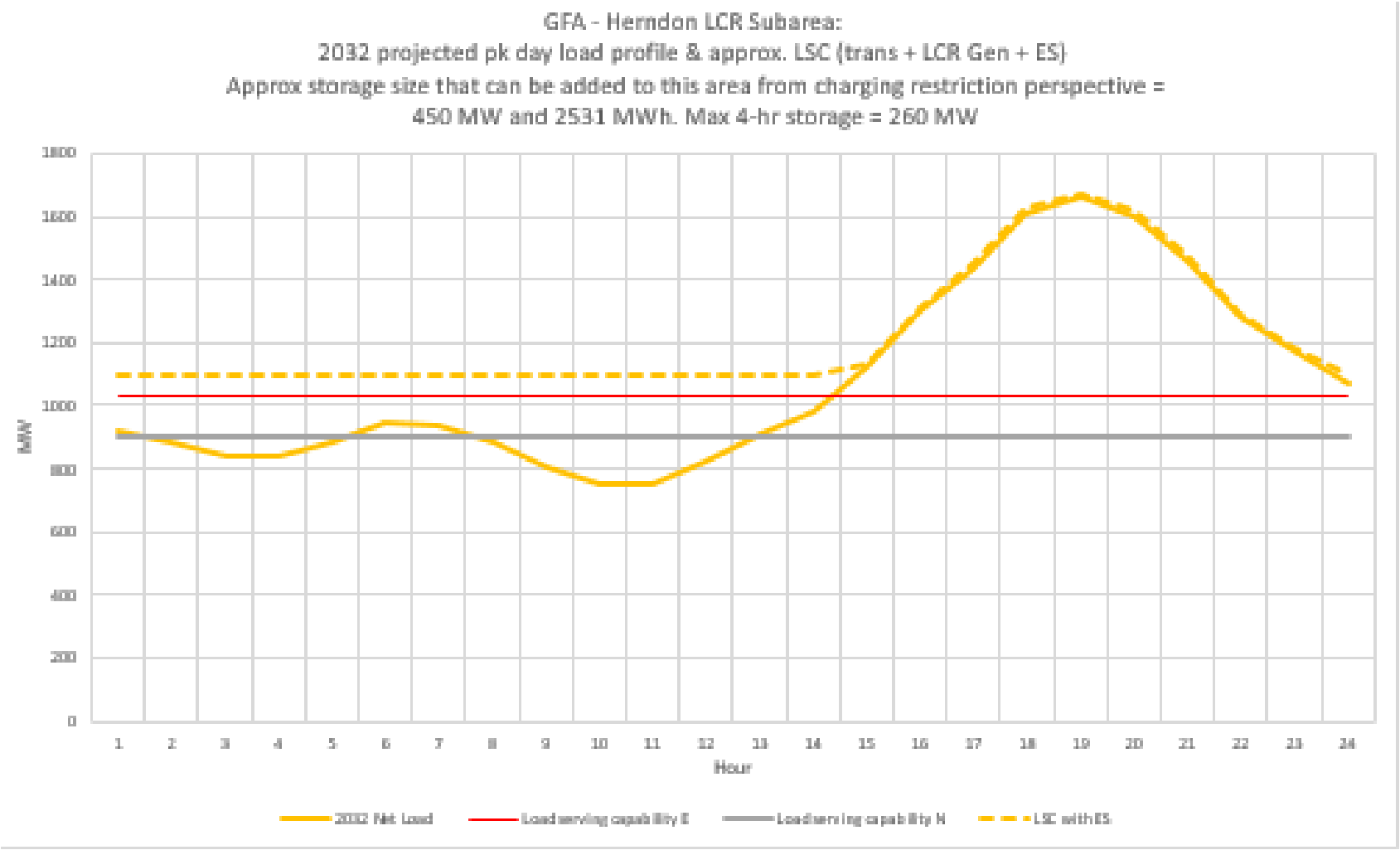

Overall Sub-Area Requirements

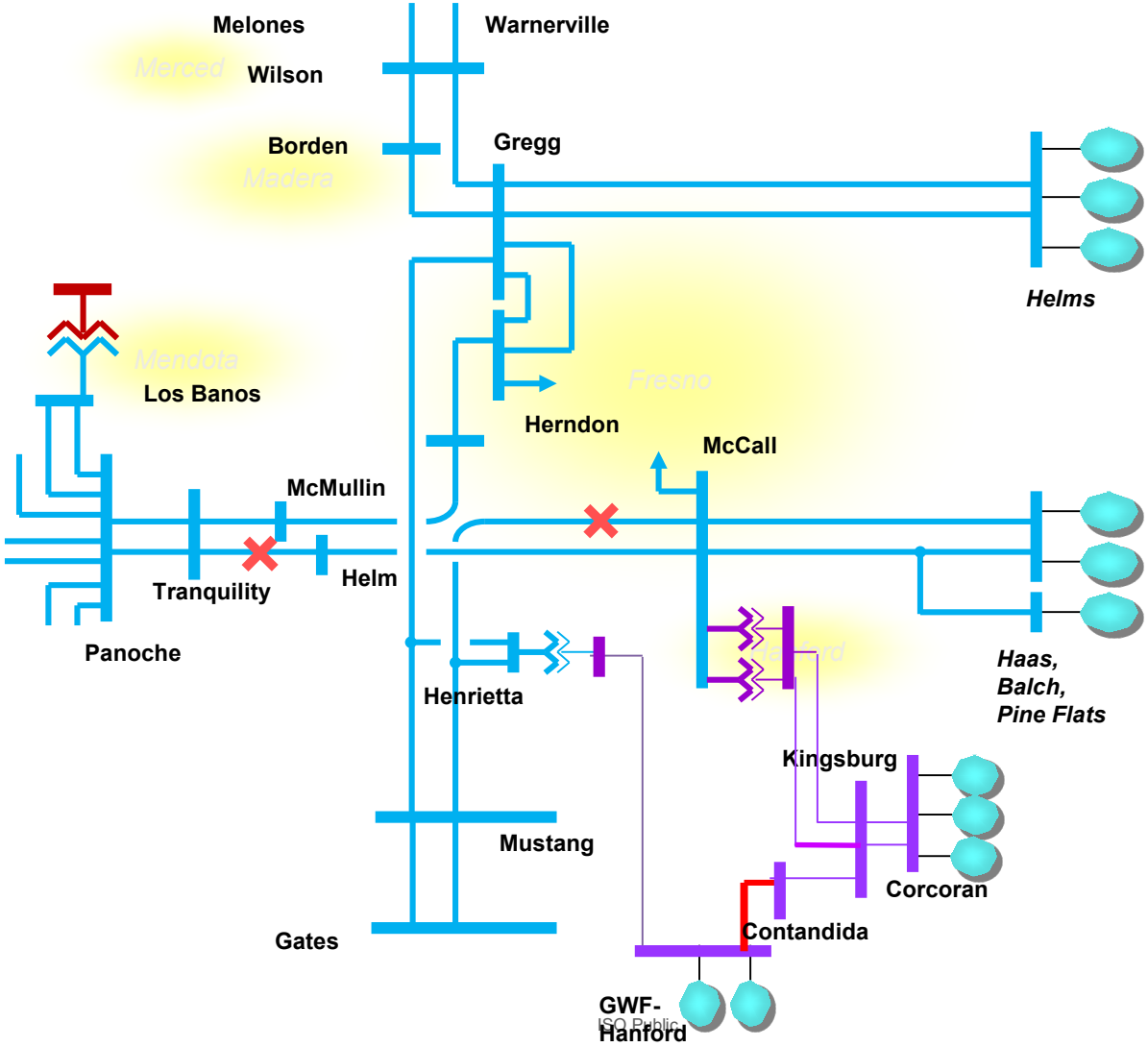

Overall Load and Resources

Load (MW)	2027	2032	Generation (MW)	2027	2032
Gross Load	3295	3805	Market/Net Seller, BESS	2759	2759
AAEE	-33	-35	Solar	436	436
Behind the meter DG	0	0	MUNI	212	212
Net Load	**3262**	**3770**	QF	4	4
Transmission Losses	130	143	Existing 20-minute Demand Response	0	0
Pumps	0	0	Mothballed	0	0
Load + Losses + Pumps	**3392**	**3913**	**Total Qualifying Capacity**	**3411**	**3411**

Overall Fresno Area : Requirements

Limit	Category	Limiting Facility	Contingency	2027 LCR (MW)	2032 LCR (MW)
First limit	P6	GWF-Contadina 115 kV Line	Panoche-Helm 230 kV Line and Gates-McCall 230 kV line (2027) Panoche-Helm 230 kV Line and CHSR09station-Mustang 230 kV line (2032)	2179	2750

Overall Sub-area: Load Profiles

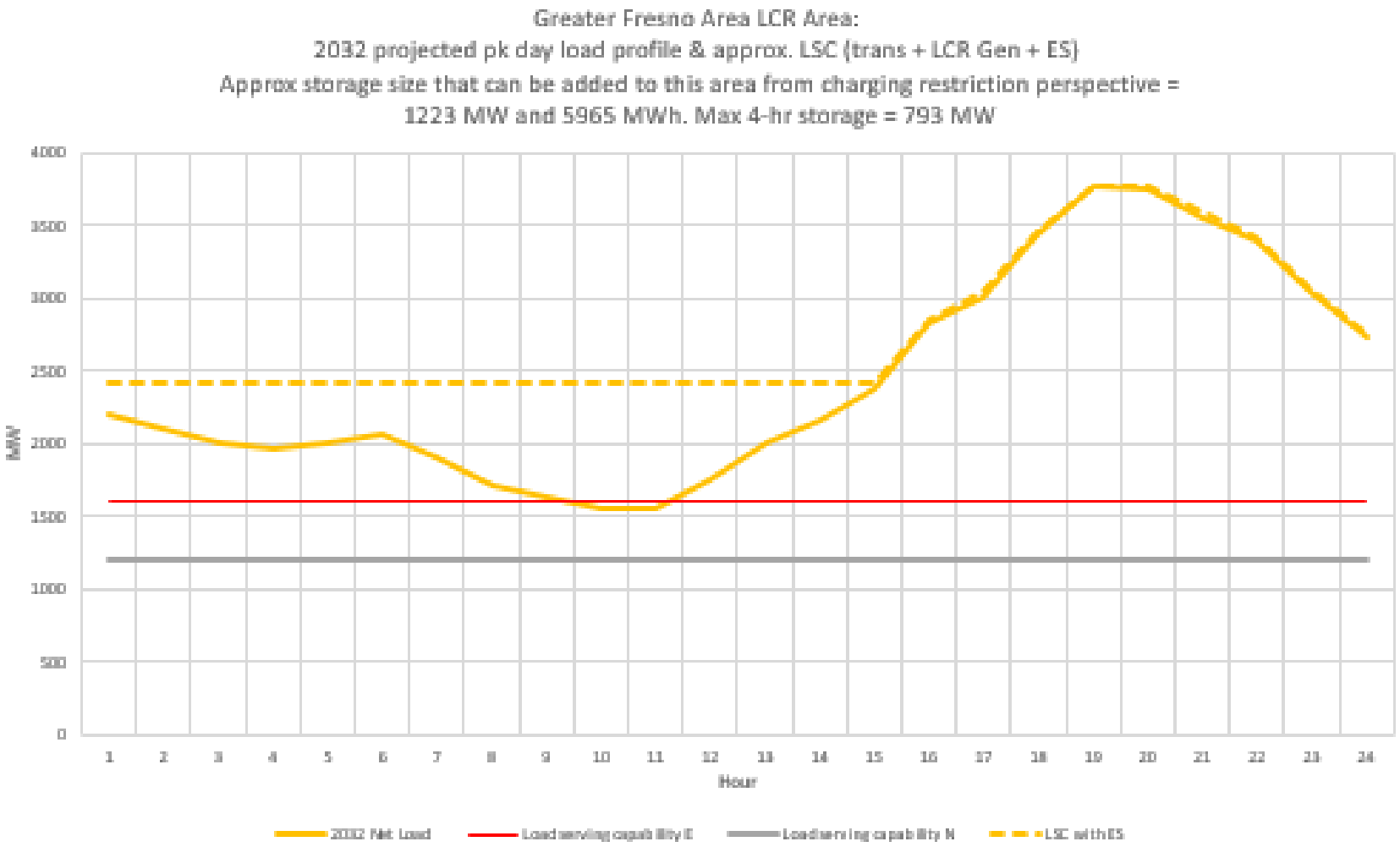

Total Fresno Area : Requirements

Study Year	Existing Generation Capacity Needed (MW)	NQC Deficiency (MW)	Total MW Need
2027	2179	332	2511
2032	2750	261	3011

Changes Compared to Previous LCR Requirements

Sub-area	2027		2032	
	Load	LCR	Load	LCR
Hanford	206	58	236	98
Coalinga	115	77 (74)	165	127 (124)
Borden	Eliminated due to Project		Eliminated due to Project	
Reedley	248	134 (97)	294	166 (130)
Panoche 115 kV	479	383	582	486 (7)
Wilson 115/70 kV	Flow-Through	500 (244)	Eliminated due to Project	
Herndon	1557	363	1737	645
Overall	3292	2179	3913	2750

California ISO

2032 Draft Long-Term LCR Study Results Kern Area

Lindsey Thomas

Senior Engineer, Regional Transmission – North

2022-2023 Transmission Planning Process Stakeholder Meeting

November 17, 2022

Kern Area LCR Sub-Areas

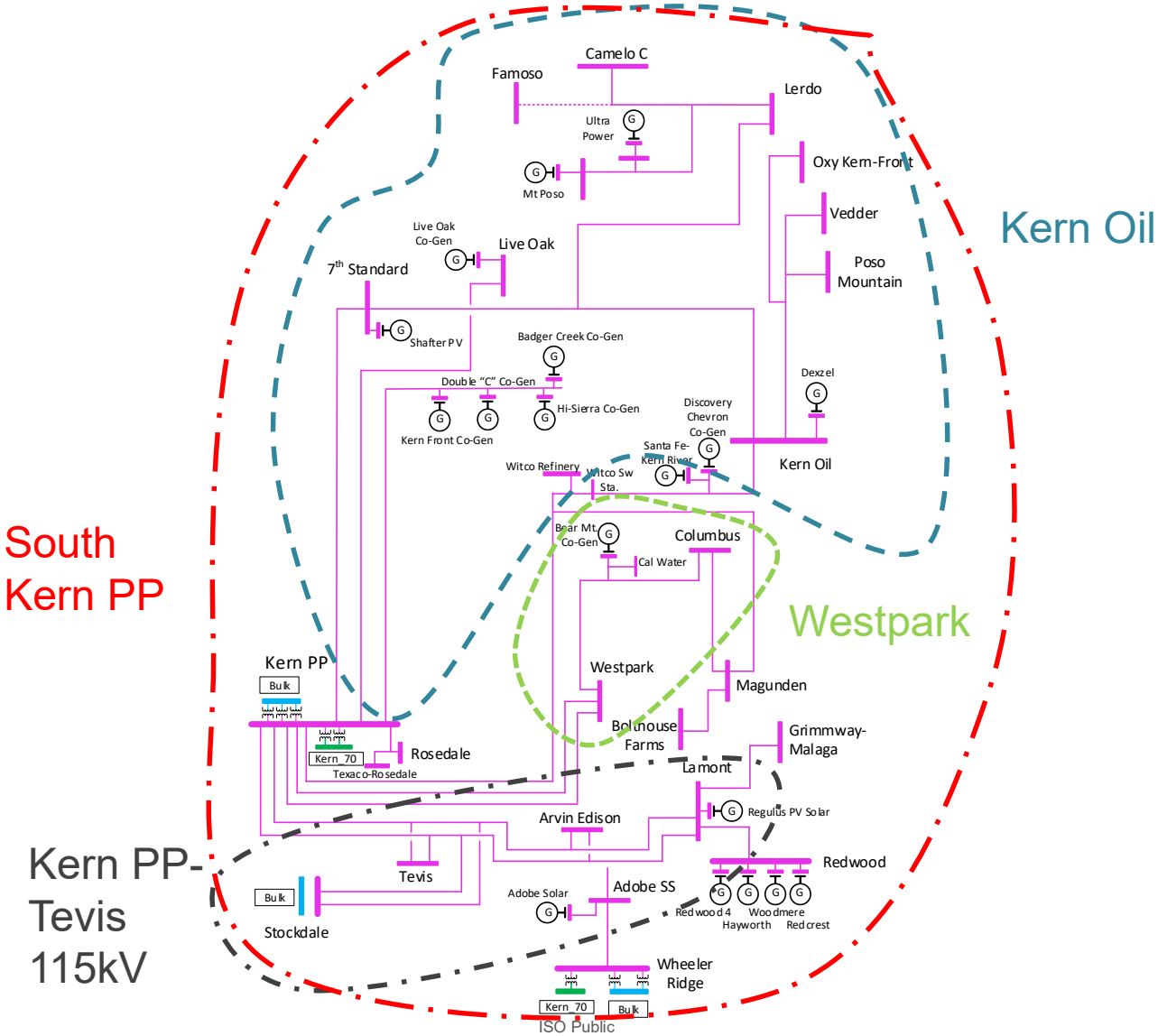

New Major Projects

Project Name	Expected ISD
Midway-Temblor 115 kV Line Reconductor & Voltage Support	October-2027
Bakersfield Nos. 1 and 2 230 kV Tap Lines Reconductoring	August-2027
Kern PP 115 kV Area Reinforcement	July- 2027
Wheeler ridge Junction Station Project	ON HOLD

Kern Area Overall: Load and Resources

Load (MW)	2027	2032	Generation (MW)	2027	2032
Gross Load	945	1016	Market/ Net Seller/ Battery	351	351
AAEE	-8	-15	Solar	73	73
Behind the meter DG	0	0	Wind	0	0
Net Load	**937**	**1000**	Muni	0	0
Transmission Losses	8	11	QF	6	6
Pumps	0	0	Future preferred resource and energy storage	0	0
Load + Losses + Pumps	**945**	**1011**	**Total Qualifying Capacity**	**430**	**430**

Kern Area LCR

Westpark Sub-Area

Year	Cat	Limiting Facility	Contingency	LCR (MW) (Deficiency)
2032	P7	Magunden – Magunden Jct 115 kV line	Kern-West Park #1 & #2 115 kV	53 (8)

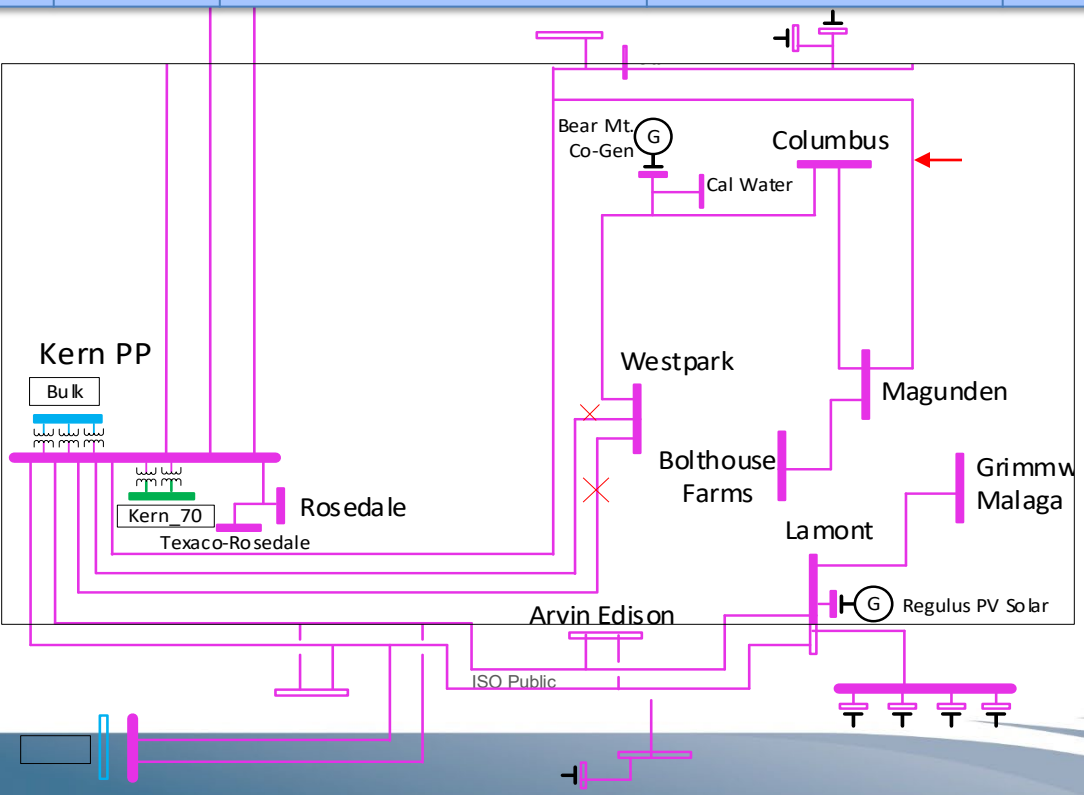

Kern Area LCR

Kern Oil Sub-Area

Year	Cat	Limiting Facility	Contingency	LCR (MW) (Deficiency)
2032	P6	Kern Oil to Kern Water 115 kV line section	Kern PP-7th Standard 115 kV lines & Kern PP-Live Oak 115 kV Line	137 (21)

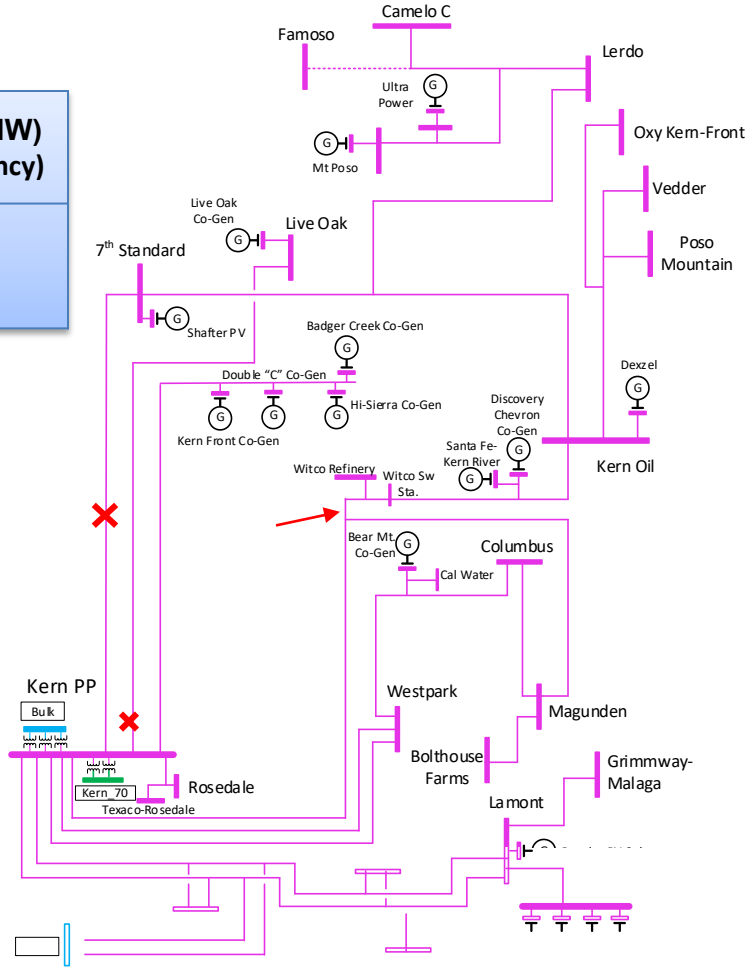

Kern Area LCR

Kern PP-Tevis 115kV Sub-Area

Year	Cat	Limiting Facility	Contingency	LCR (MW) (Deficiency)
2032	P2	Kern Power -TevisJ2 115 kV Line	KERN-TEVIS-STOCKDALE 115 kV (KERN PWR-TEVISJ1)	24 (24 peak)

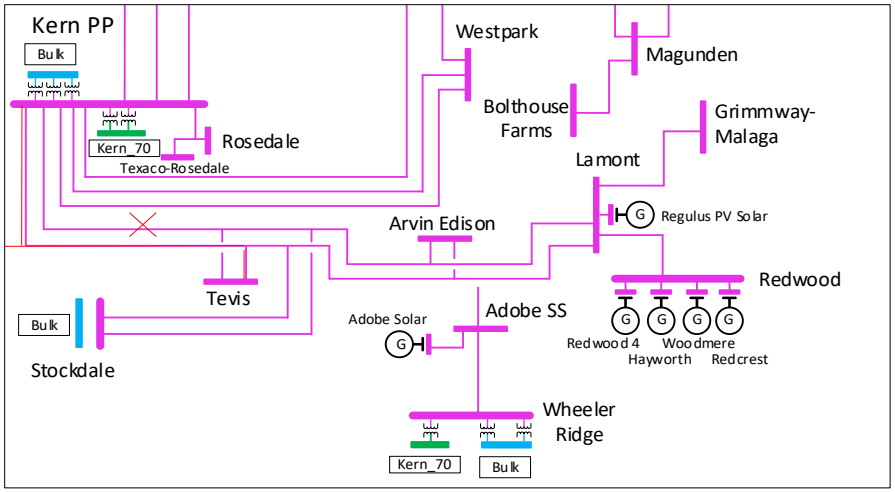

Kern Area LCR

South Kern PP Sub-Area

Year	Cat	Limiting Facility	Contingency	LCR (MW) (Deficiency)
2032	P6	Kern 230/115 kV T/F # 5	Kern 230/115 kV T/F # 3 & Kern 230/115 kV T/F # 4	424 (67 peak)

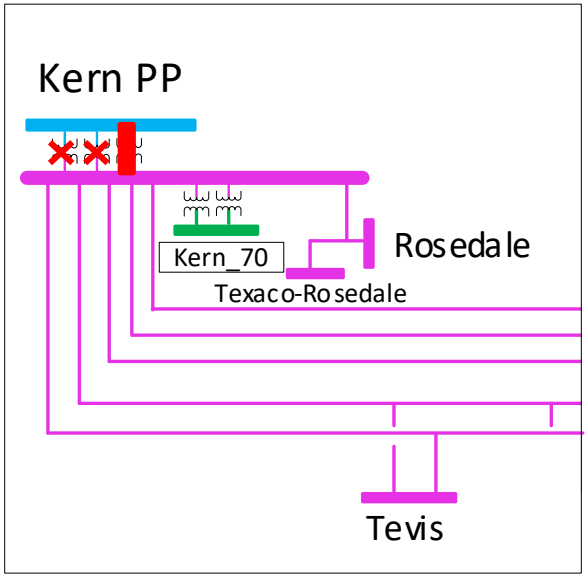

South Kern PP Sub-Area : Load Profile and Maximum Storage

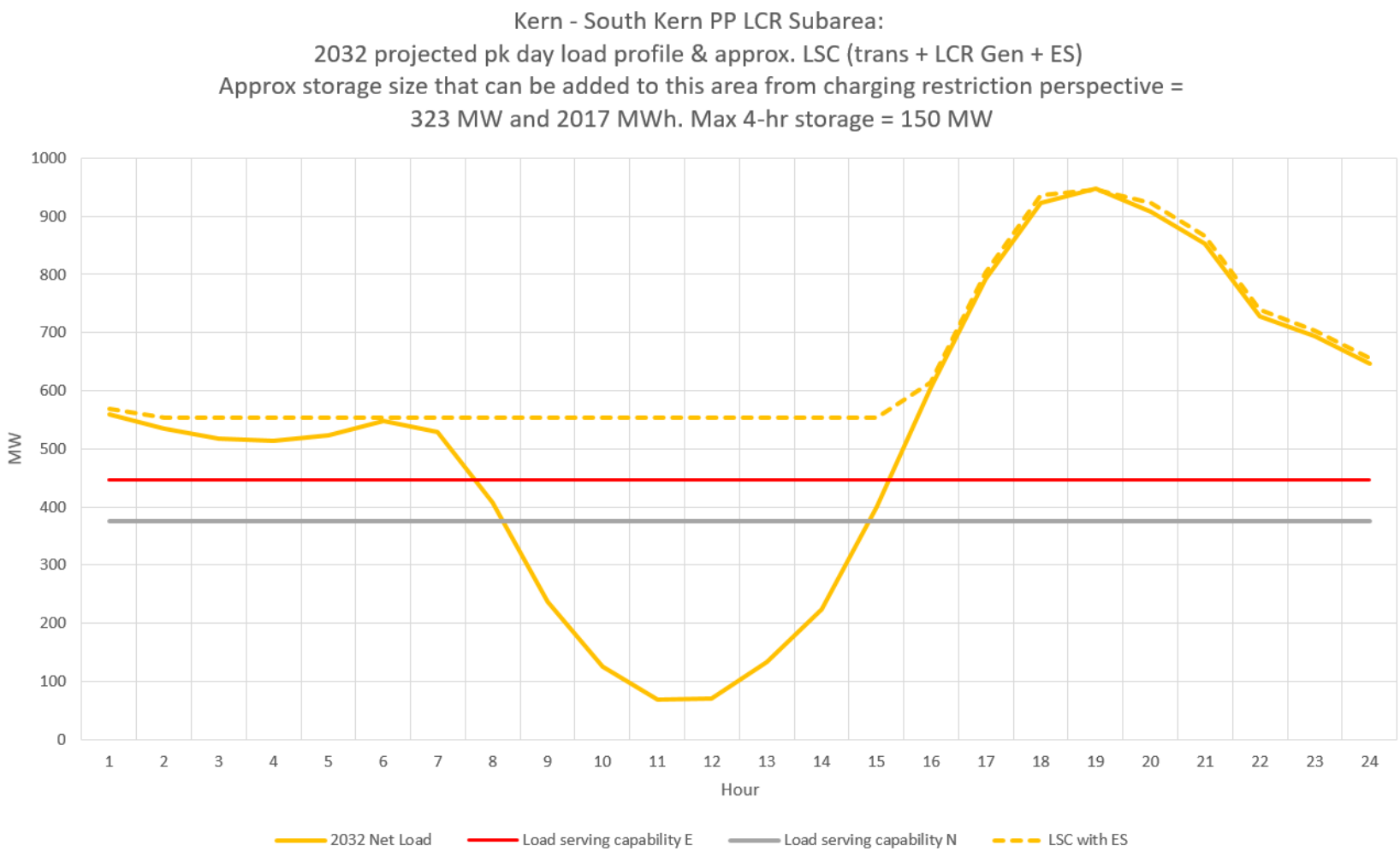

Kern Total LCR Need

2032 LCR Need	Existing Generation Capacity Needed (MW)	NQC Deficiency (MW)	Total MW Need
Category P6 (Multiple)	424	29	453

Changes Compared to Previous LCR Requirements

Sub-area	2027		2032	
	Load	LCR	Load	LCR
West Park	125	10	125	53 (8)
Kern Oil	285	70	310	137 (21)
KernPP-Tevis 115 kV	150	0	150	24
South Kern	937	320	1010	424
Kern Overall	937	320	1010	453 (29)

Load is Net Load+Losses

California ISO

2032 Draft Long-Term LCR Study Results Big Creek/Ventura Area

Anuj Hiray

Engineer, Regional Transmission – South

2022-2023 Transmission Planning Process Stakeholder Meeting

November 17, 2022

Big Creek - Ventura Area Transmission System

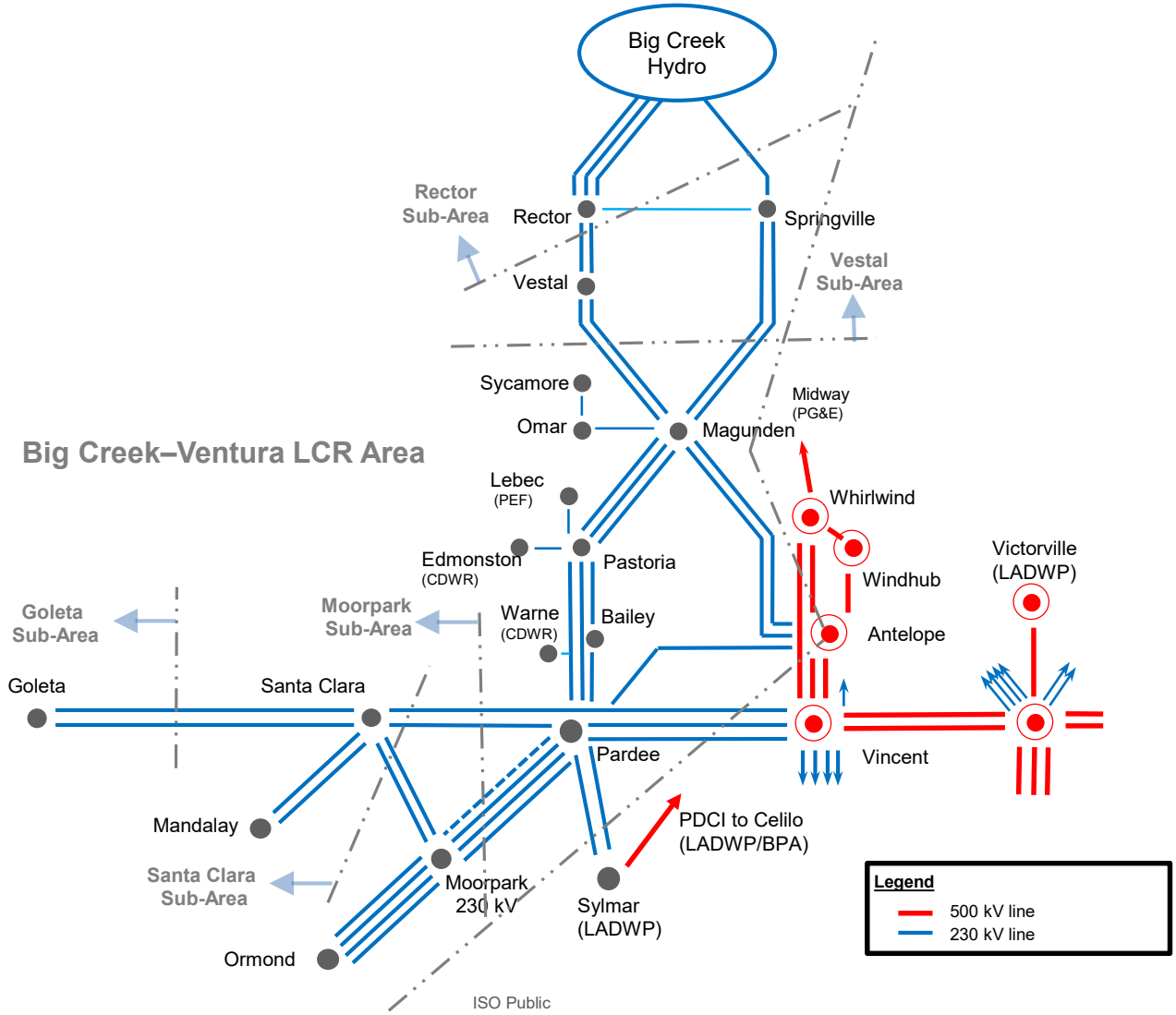

Major transmission projects

- Pardee-Moorpark No. 4 230 kV Transmission Project (ISD - 6/1/2021)
- Pardee-Sylmar 230 kV Rating Increase Project (ISD- 5/31/2023)

Resource Assumptions

- CPUC-approved renewable portfolio resources are modeled
- Generators older than 40 year are assumed to be retired

Big Creek/Ventura: Load and Resources

Load (MW)		Generation NQC (MW)	
	2032		**2032**
Gross Load	4,560	Market/Net Seller	2,656
AAEE	-97	Solar (Sept. NQC)	262
Behind the meter PV*	0	Muni	312
Net Load	**4,463**	QF	112
Transmission Losses	93	Demand Response and other Preferred Resources	70
Pumps	298	Energy Storage	798
Load+Losses+Pumps	**4,854**	**Total Qualifying Capacity**	**4,210**

Rector Sub-Area Requirements

Category	Limiting Facility	Contingency	2032 LCR (MW)
LCR for Rector is satisfied by the LCR of the larger Vestal sub-area			

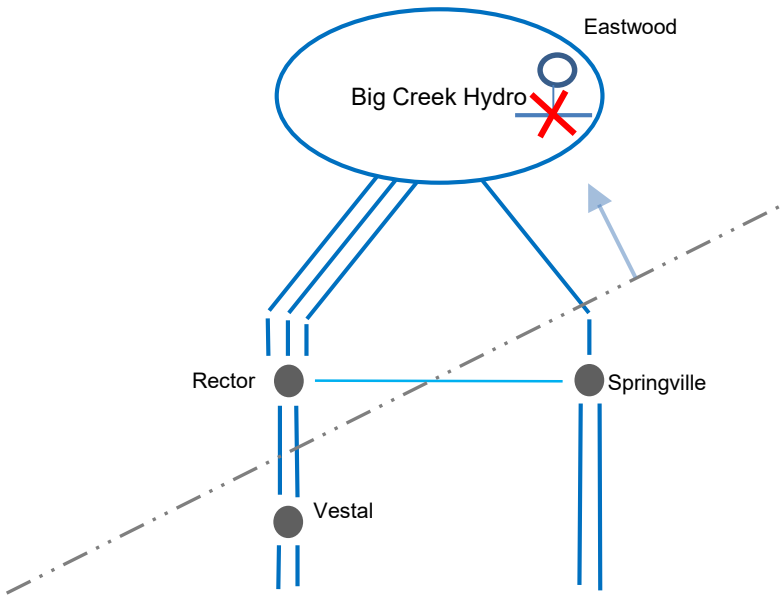

Vestal Sub-Area Requirements

Category	Limiting Facility	Contingency	2032 LCR (MW)
P3/P6	Magunden–Vestal #1 230 kV line	Magunden–Vestal #2 line with Eastwood out of service	376

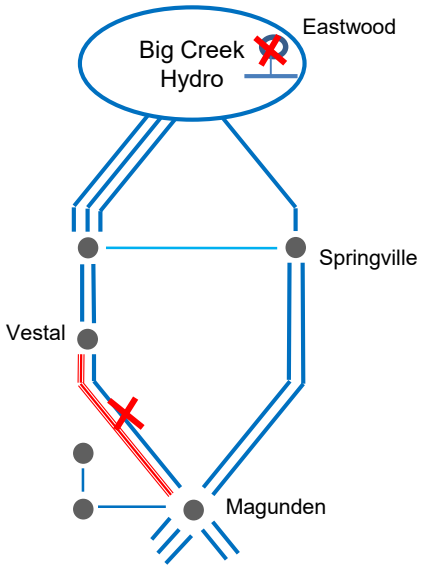

Vestal Sub-Area Load Profiles and ES Capability

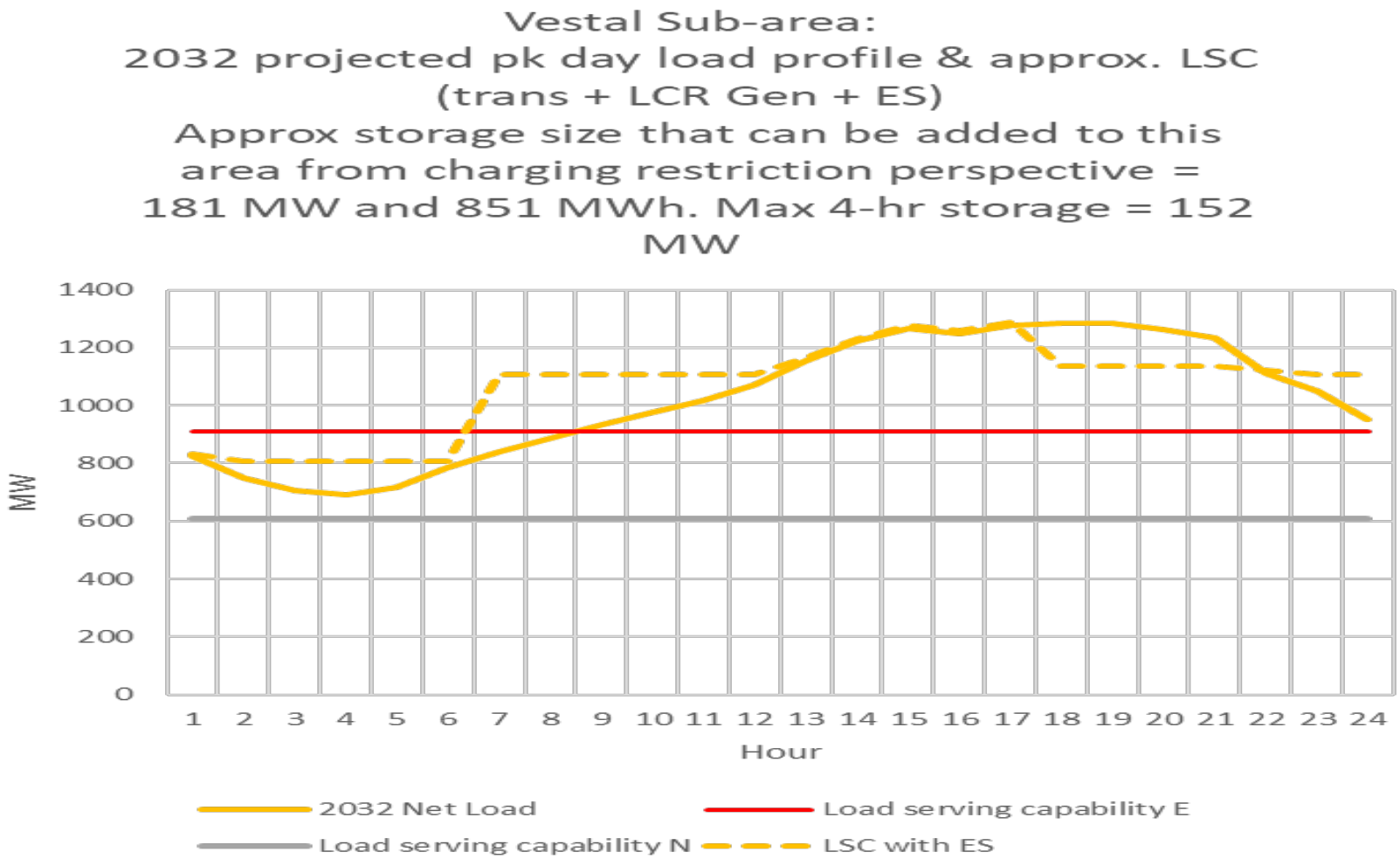

Goleta Sub-Area Requirements

Category	Limiting Facility	Contingency	2032 LCR (MW)
LCR for Goleta is satisfied by the LCR of the larger Santa Clara sub-area			

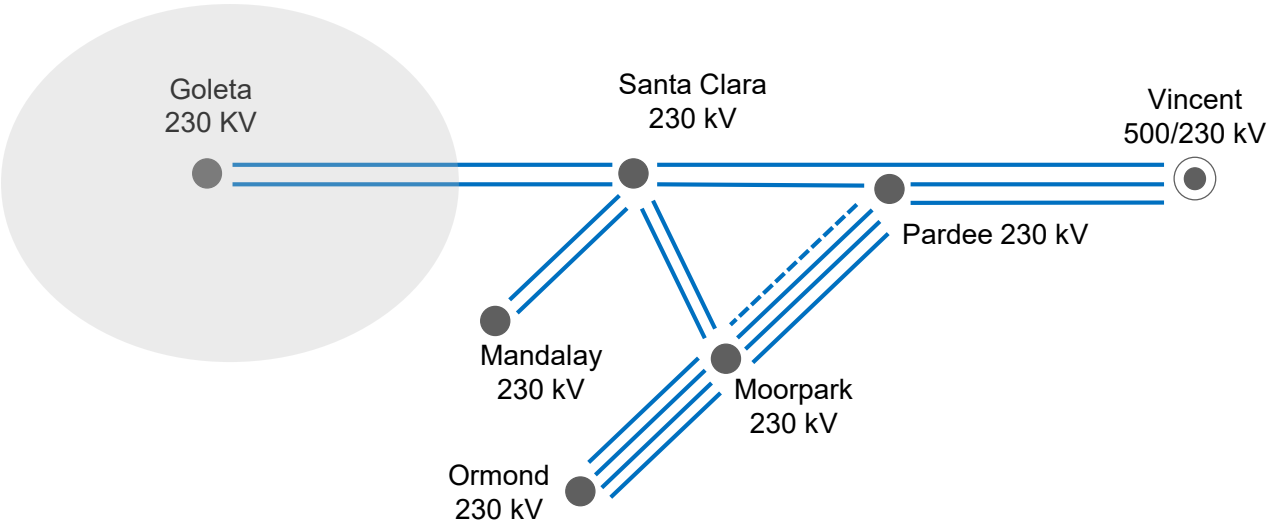

Santa Clara Sub-Area Requirements

Category	Limiting Facility	Contingency	2032 LCR (MW)
P1+P7	Voltage collapse	Pardee–Santa Clara 230 kV line followed by Moorpark–Santa Clara #1 and #2 230 kV DCTL	274

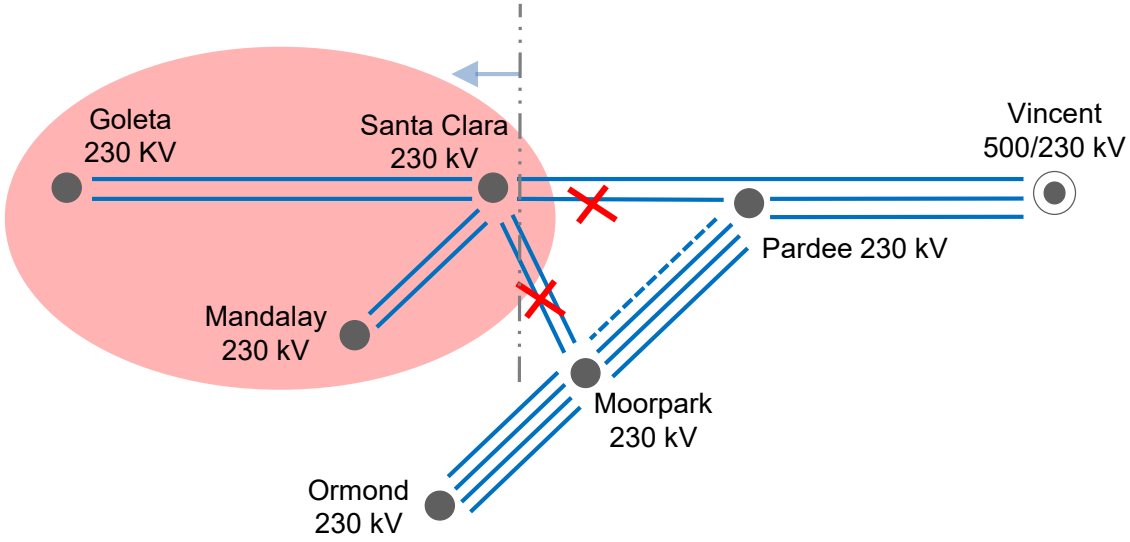

Santa Clara Sub-Area Load Profiles and ES Capability

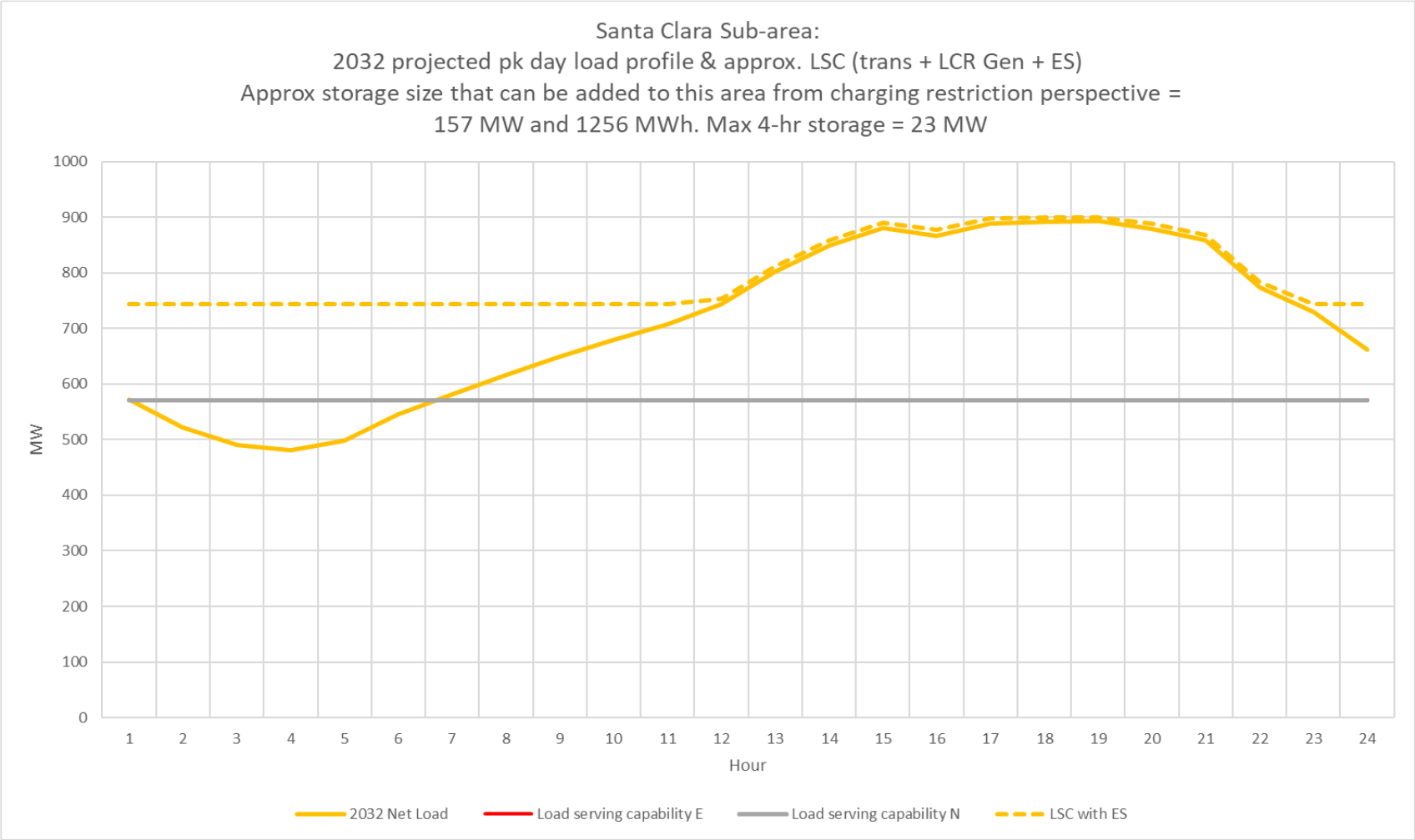

Moorpark Sub-Area Requirements

Category	Limiting Facility	Contingency	2032 LCR (MW)
No LCR requirement identified			

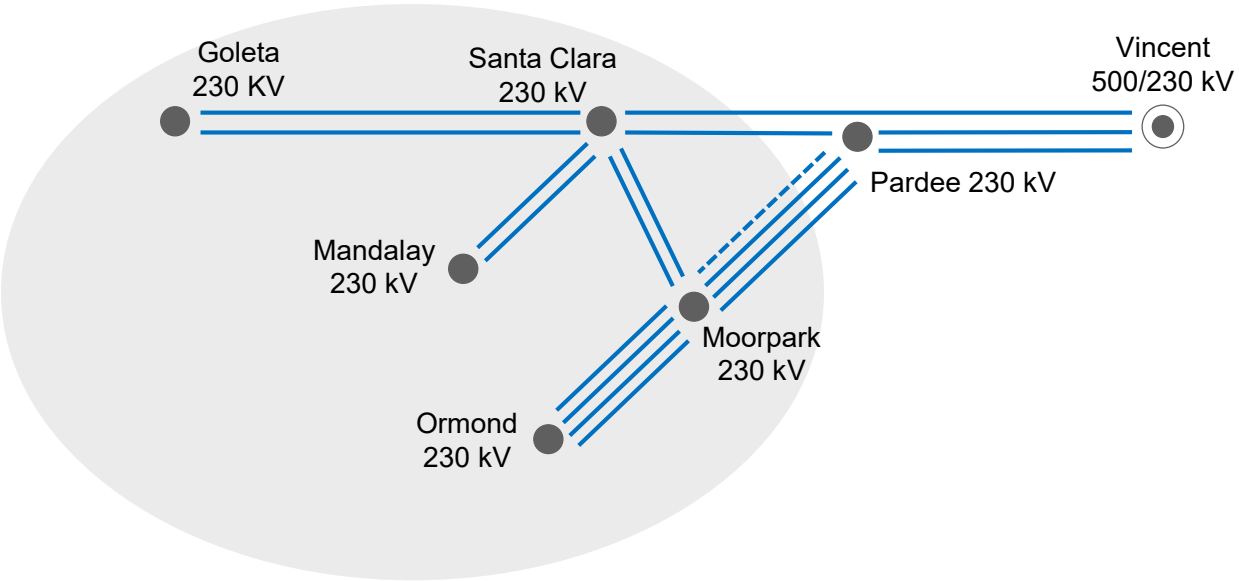

Overall Big Creek-Ventura Area Requirements

Category	Limiting Facility	Contingency	2032 LCR (MW)
P6	Pardee-Sylmar #1 or #2 230 kV line	Overlapping outage of Lugo–Victorville 500 kV line and one Pardee-Sylmar 230 kV line	1,366

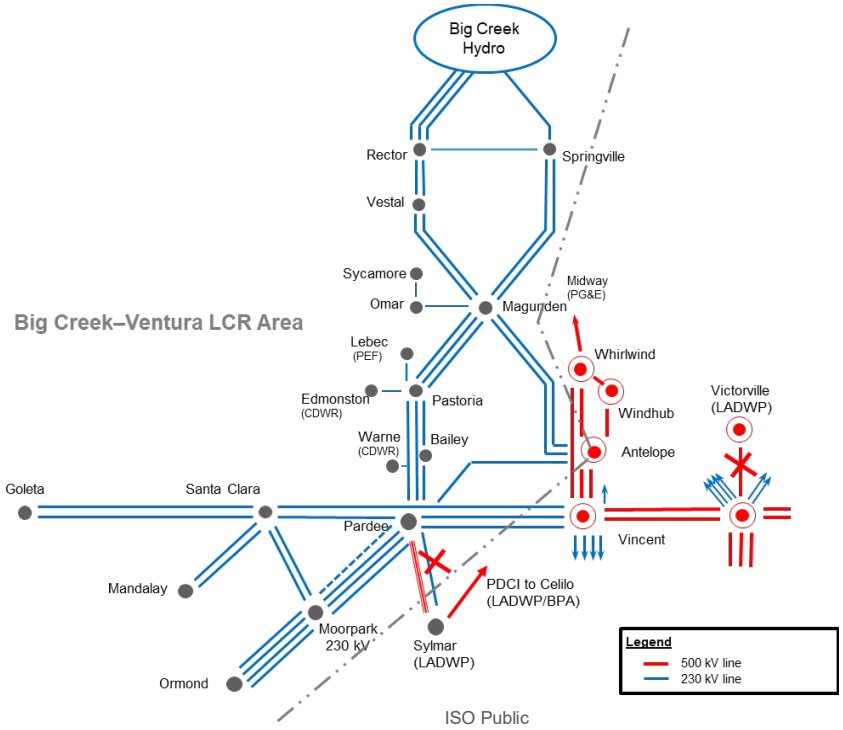

Big Creek/Ventura Area Load Profiles and ES Capability

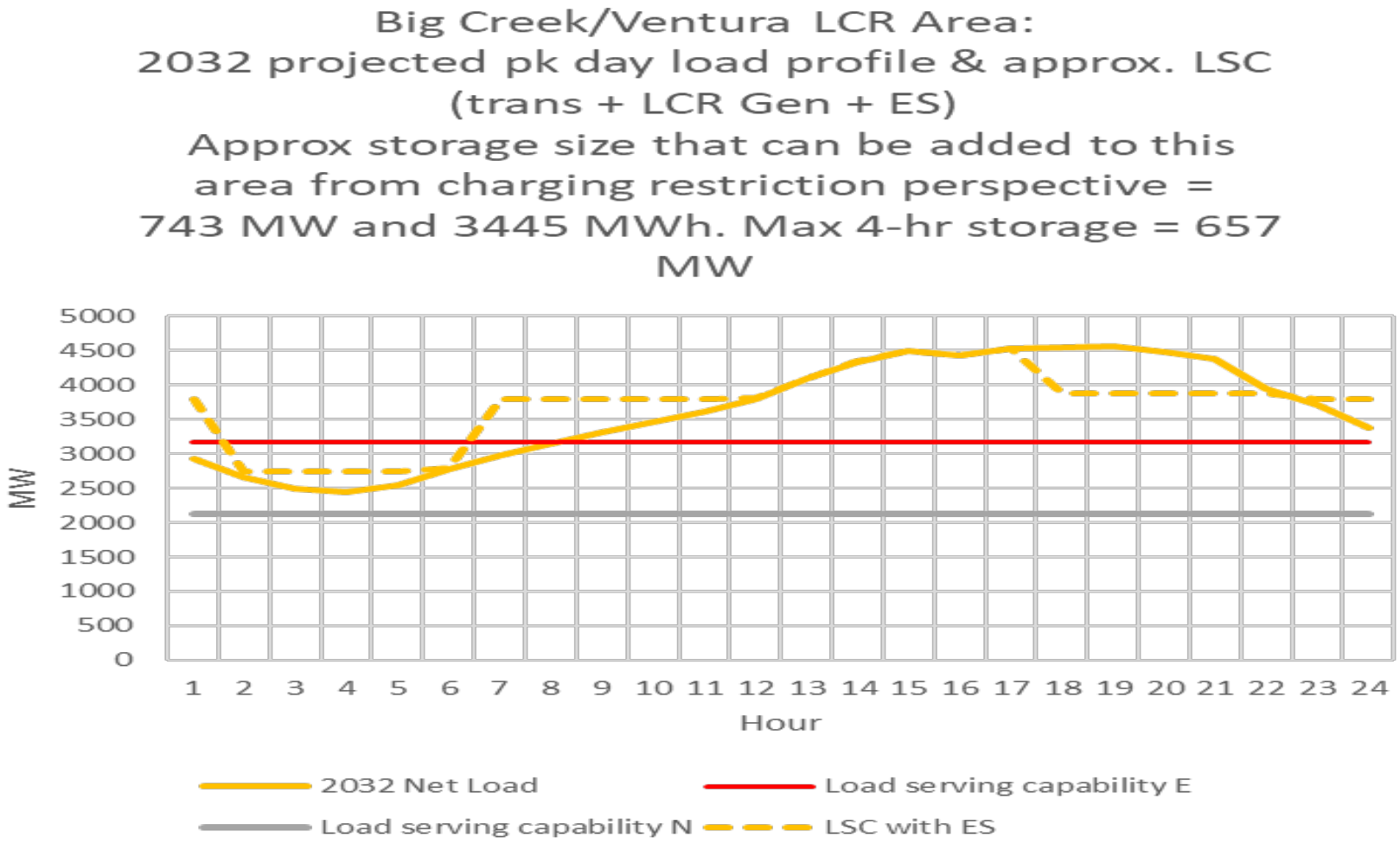

Energy Storage Local Capacity Assessment Summary

Area	LCR (MW)	Approximate energy storage that can be added		~ 4-hour energy storage as 1-for-1 MW replacement	Remark
		Capacity (MW)	Energy (MWh)	Capacity (MW)	
Rector	0	N/A	N/A	N/A	No LCR requirement
Vestal	376	181	851	152	
Goleta	0	N/A	N/A	N/A	No LCR requirement
Santa Clara	274	157	1256	23	Amount includes approved 195 MW/780 MWh ES
Moorpark	0	N/A	N/A	N/A	No LCR requirement
Overall Big Creek–Ventura	1,366	743	3,445	657	

Changes Compared to Previous LCR Results

Sub-Area	2027		2032		Reason for LCR Change
	Load (MW)	LCR (MW)	Load (MW)	LCR (MW)	
Rector	727	-	956	-	N/A
Vestal	1,174	330	1,287	376	Load increased
Goleta	208	-	235	-	N/A
Santa Clara	853	241	896	274	Load increased
Moorpark	1,528	-	1,588	-	N/A
Overall Big Creek Ventura	4,440	1,126	4,560	1,366	Load increased

California ISO

2032 Draft Long-Term LCR Study Results
LA Basin and San Diego-Imperial Valley Areas

David Le
Senior Advisor, Regional Transmission – South

2022-2023 Transmission Planning Process Stakeholder Meeting
November 17, 2022

Overview of the Final Study Results

- Providing study results for the LA Basin and San Diego-Imperial Valley LCR areas and their bulk sub-areas
- Providing load shapes and estimated charging capability for energy storage for the LCR areas and sub-areas

LA Basin and San Diego-Imperial Valley Areas

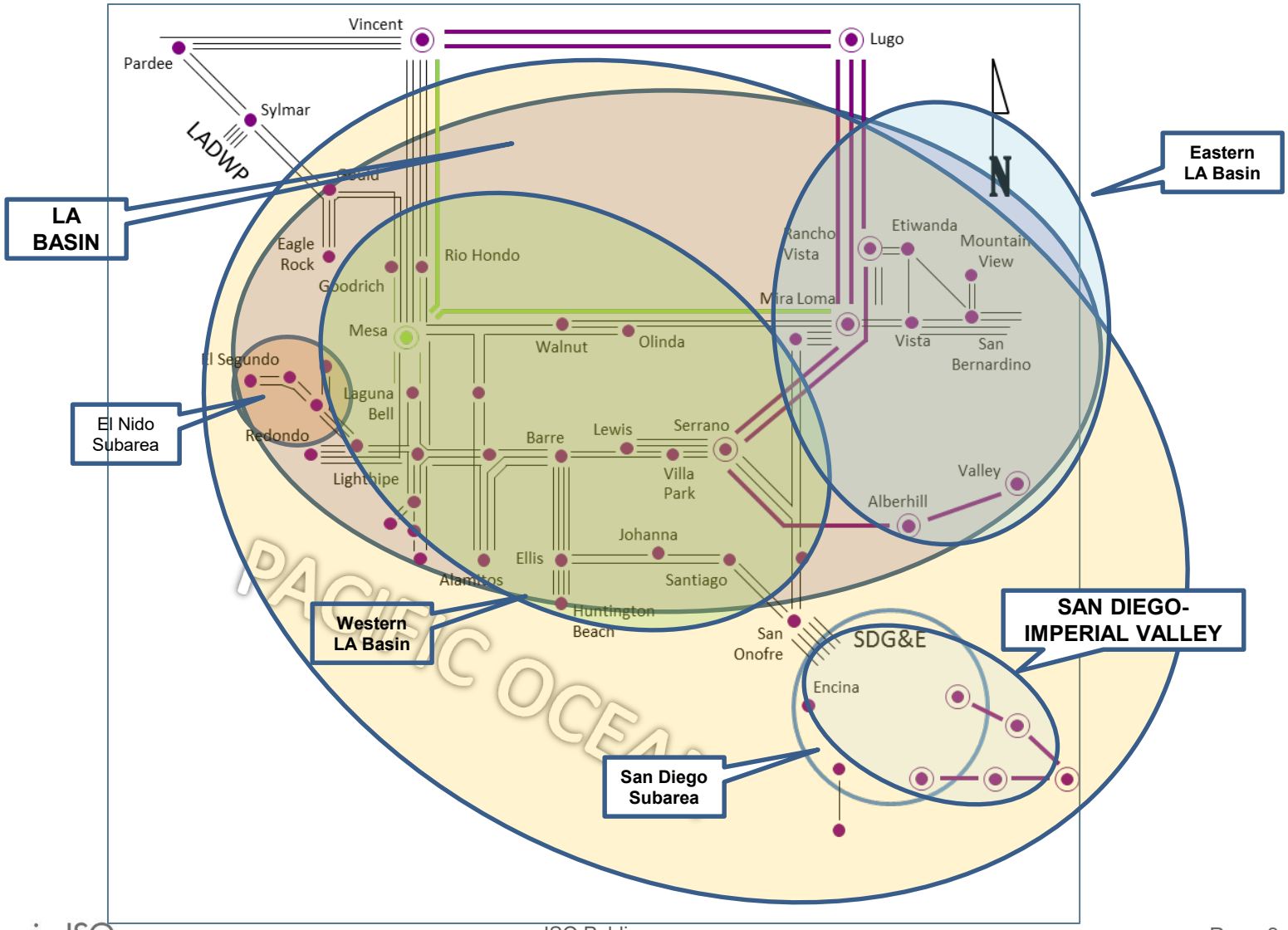

Major New Transmission Upgrades

Project Name	Service Areas	Expected ISD	Modeled in 2032 LCR case
New Transmission Projects			
Mesa Loop-In Project (230kV Loop-In)	SCE	6/1/2021	√
Mesa Loop-In Project (500kV Loop-In)	SCE	5/2022	√
Laguna Bell Corridor Upgrade	SCE	5/2022	√
Lugo – Victorville 500 kV Upgrade (SCE portion)	SCE	1/2025	√
Alberhill 500 kV Method of Service	SCE	4/2027	√
Laguna Bell - Mesa No. 1 230 kV Line Rating Increase Project	SCE	12/2023	√
Ten West Link Project (Delaney-Colorado 500kV Line)	APS/SCE	4/2024	√
Southern Orange County Reliability Enhancement	SDG&E	5/2024	√
Imperial Valley – El Centro 230 kV (“S” line) upgrades	IID / SDG&E	2023 (to be updated)	√

Additional New Resources

- A total of 1,100 MW of renewable portfolio battery energy storage at Etiwanda, Hinson, Laguna Bell and Walnut substations
- A total of 959 MW of renewable portfolio battery energy storage at Capistrano, Encina, Silvergate, Sycamore, and Imperial Valley substations
- A total of 500 MW of pumped hydro energy storage at Sycamore substation

LA Basin Area: Loads and Resources

Loads (MW)	2032	Resources NQC* (MW)	2032
Gross Load	20589	Market, Net Seller, Wind, IFM Battery	5960
AAEE	-421	Muni	966
Behind the meter DG (production at peak load at 19:00 hr.)	0	QF	114
Additional Transportation Electric + Fuel Substitution (beyond January 2022 forecast)	627	LTPP LCR Preferred Resources (BTM BESS, EE, DR, PV)	135
Net Load	**20795**	Existing Demand Response (total RDRR > 20 minutes and < 20 min.)	772
Transmission Losses	312	Solar generation	11
Pumps	0		
Loads + Losses + Pumps	**21107**	**Total Qualifying Capacity**	**7459**

*August NQC for RA accounting purpose

San Diego-Imperial Valley Area: Loads and Resources

Loads (MW)	2032	Resources NQC* (MW)	2032
Gross Load	5217	Market, Net Seller, Battery, Wind	4967
AAEE	-124	Solar (Production is “0” at 20:00 hr. PDT)	378
Behind the meter DG (production at peak load at 19:00 hr.)	0	QF	2
Additional Transportation Electric + Fuel Substitution (beyond January 2022 forecast)	190	Muni	0
Net Load	**5283**	LTPP Preferred Resources	0
Transmission Losses	127	Existing Demand Response	26
Pump Loads (at peak demand)	0	Mothballed	0
Loads + Losses	**5410**	**Total Qualifying Capacity**	**5373**

*August NQC for RA accounting purpose

El Nido Sub-area LCR (LA Basin)

Year	Category	Limiting Facility	Contingency	LCR (MW)
2027*	P7	La Fresa-La Cienega 230 kV	La Fresa – El Nido #3 & 4 230 kV lines	341
2032	P7	La Fresa-La Cienega 230 kV	La Fresa – El Nido #3 & 4 230 kV lines	370

Reasons for the changes in the LCR needs:

- *The 2027 study results are from earlier 2023 and 2027 LCR assessments as part of CAISO annual LCR assessment this year. The information for 2027 LCR need is provided here for comparison with the 2032 LCR assessment.
- The 2032 LCR need increases due to higher demand forecast.

El Nido Sub-area Load Shape and Estimated Energy Storage Charging Capability

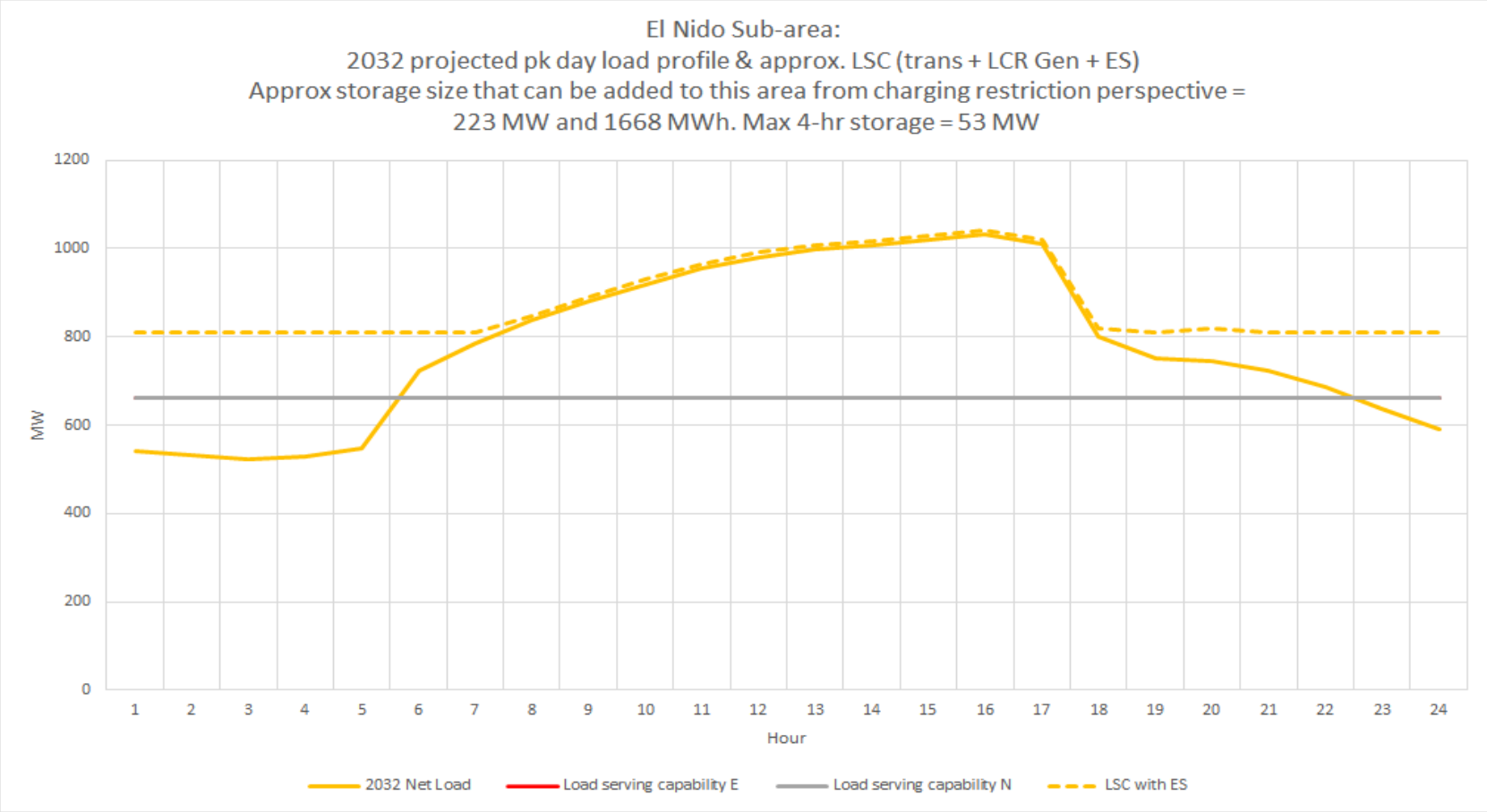

Western LA Basin Sub-area LCR

Year	Category	Limiting Facility	Contingency	LCR (MW)
2027	P7	San Onofre – San Luis Rey #1 230 kV line (line flow in the South to North direction)	San Onofre – San Luis Rey #2 and #3 230 kV lines	3489
2032	P6	Serrano 500/230kV Transformer Bank #2	Serrano 500/230kV Transformer Banks #1 and 3	5568*

<u>Reasons for the changes in the LCR needs:</u>

- LCR need increases due to higher demand forecast for 2032
- * Battery energy storage was dispatched (1141 MW) but may not have sufficient charge to serve load for some hours due to area system charging constraint, however other type of resources can be used to avoid a deficiency.

Western LA Basin Sub-area Load Shape and Estimated Energy Storage Charging Capability

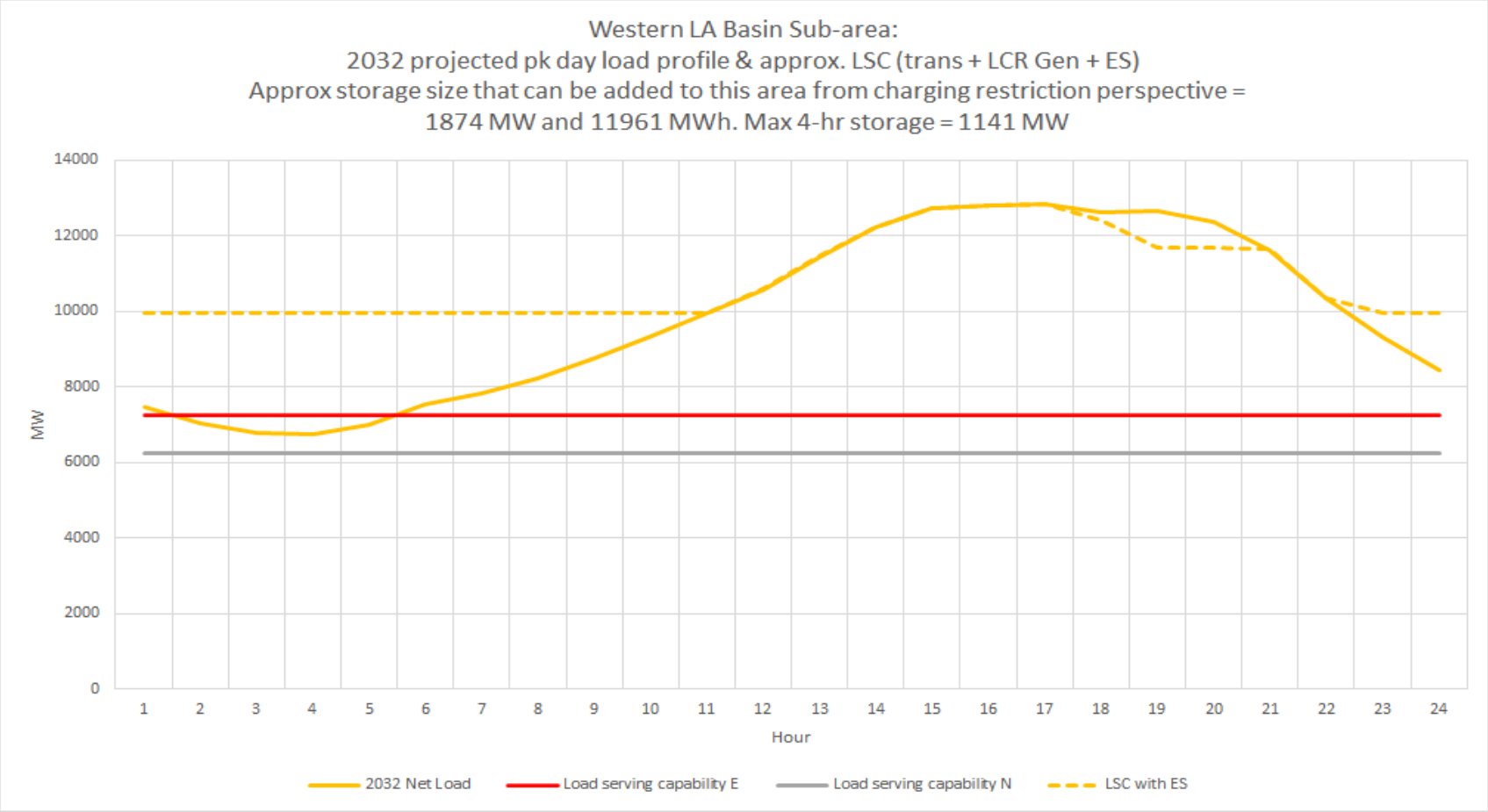

Eastern LA Basin Sub-area LCR

Year	Category	Limiting Facility	Contingency	LCR (MW)
2027	P7	San Onofre – San Luis Rey #1 230 kV line (line flow in the South to North direction)	San Onofre – San Luis Rey #2 and #3 230 kV lines	2642
2032	P1 & P7 (voltage stability)	Voltage stability	Lugo – Rancho Vista 500kV line, followed by Lugo – Mira Loma #2 and #3 500kV lines (common tower)	1820*

<u>Reasons for the changes in the LCR needs:</u>

- LCR need decreases due to different critical constraint for 2032
- * Battery energy storage was dispatched (710 MW) but may not have sufficient charge to serve load for some hours due to area system charging constraint, however other type of resources can be used to avoid a deficiency.

Eastern LA Basin Sub-area Load Shape and Estimated Energy Storage Charging Capability

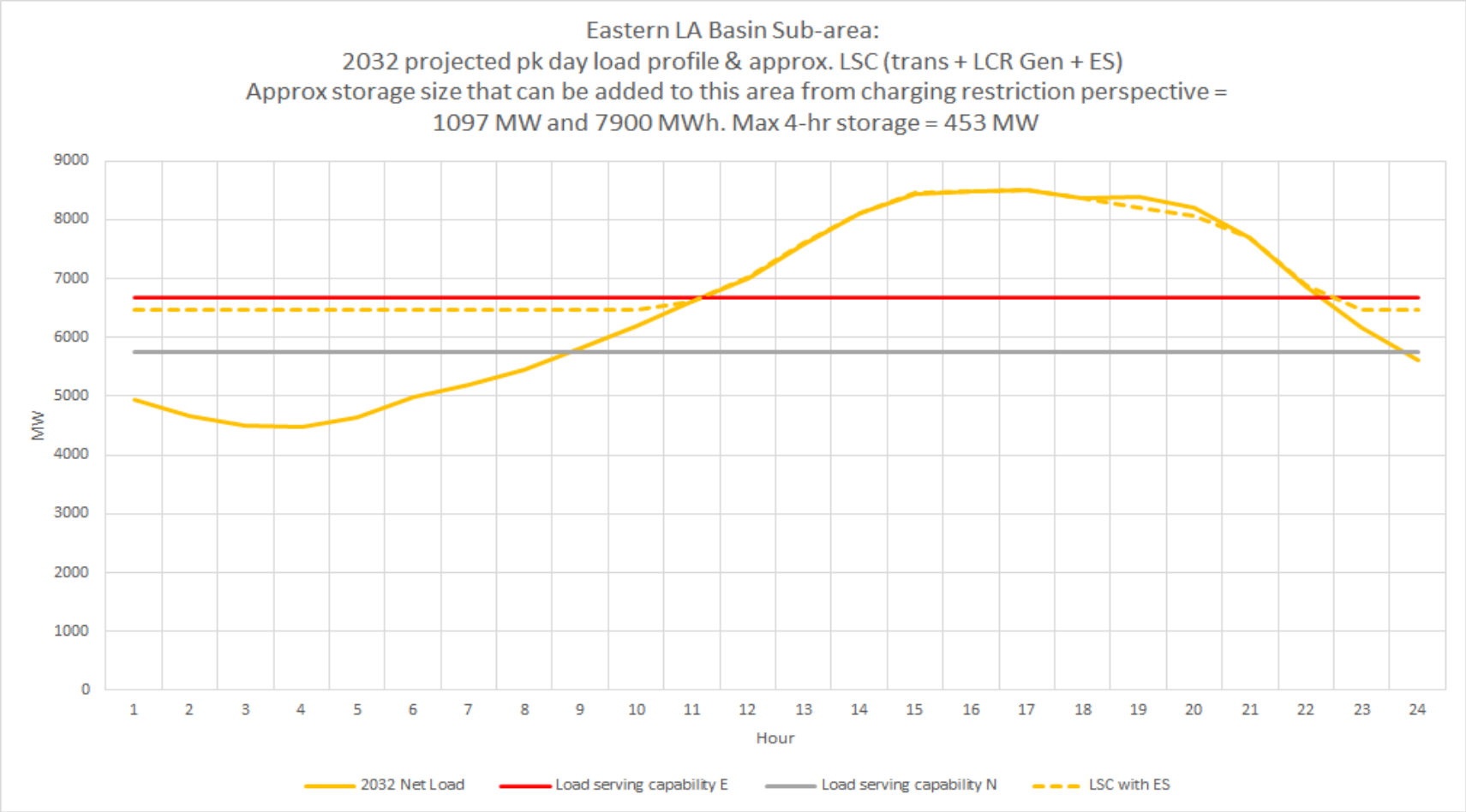

Overall LA Basin LCR Need

Year	Limiting Facility	Limiting Facility	Contingency	LCR (MW)
2027	Sum of Western and Eastern LA Basin LCR needs	See Western and Eastern LA Basin LCR results	See Western and Eastern LA Basin LCR results	6131
2032	Sum of Western and Eastern LA Basin LCR needs	See Western and Eastern LA Basin LCR results	See Western and Eastern LA Basin LCR results	7388*

Reasons for the changes in the LCR needs:

- LCR need increases when compared to 2027 LCR need due to increase in the load forecast as well as different critical constraint for 2032
- * Battery energy storage was dispatched (1589 MW) but may not have sufficient charge to serve load for some hours due to area system charging constraint, however other type of resources can be used to avoid a deficiency.

Overall LA Basin Area Load Shape and Estimated Energy Storage Charging Capability

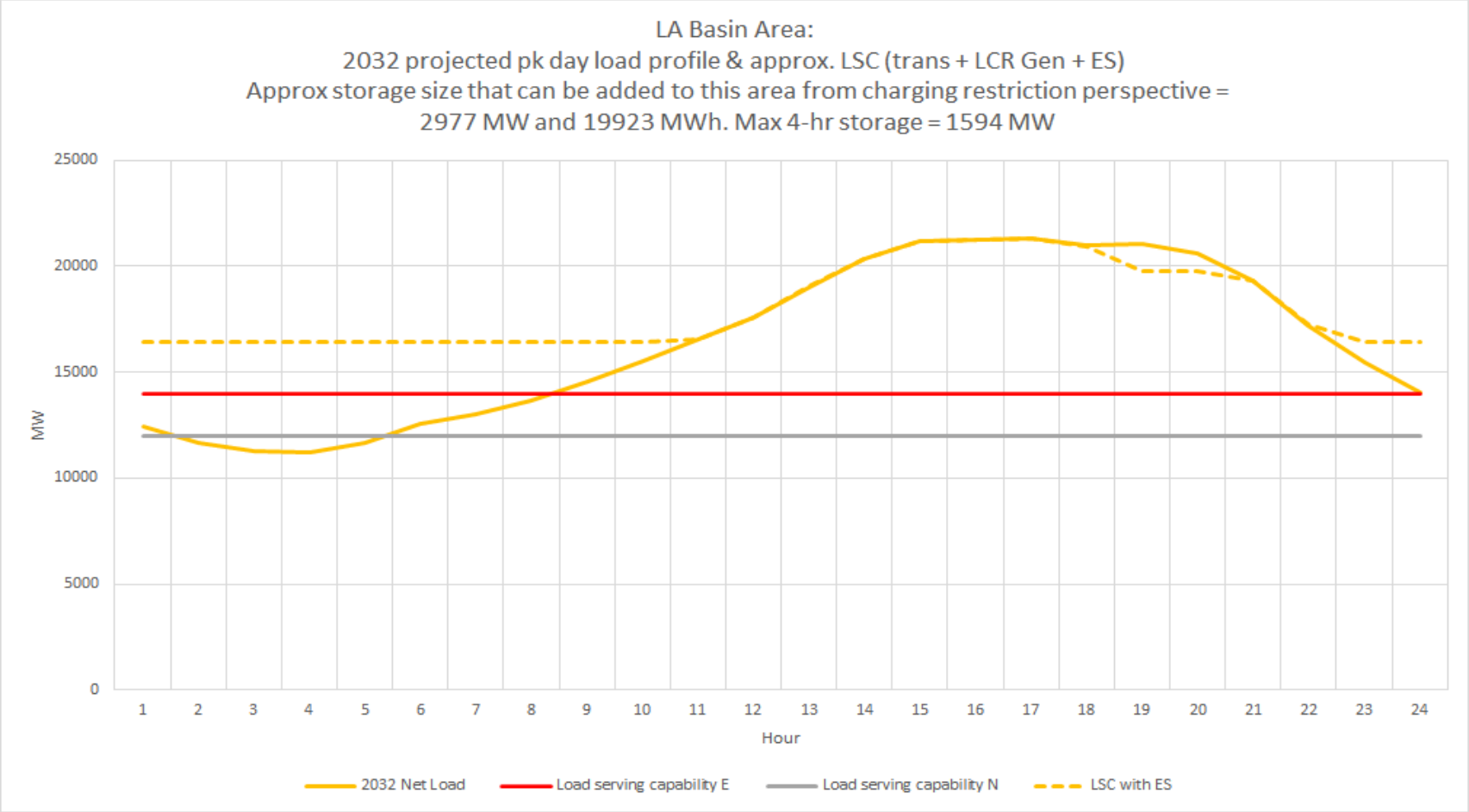

San Diego Bulk Sub-area LCR

Year	Category	Limiting Facility	Contingency	LCR (MW)
2027	P6	Remaining Sycamore-Suncrest 230 kV	ECO-Miguel 500 kV line, system readjustment, followed by one of the Sycamore-Suncrest 230 kV	3369
2032	P6	Remaining Sycamore-Suncrest 230 kV	ECO-Miguel 500 kV line, system readjustment, followed by one of the Sycamore-Suncrest 230 kV	2361

Reasons for the changes in the LCR needs:

- The LCR need decreases due to new resource additions at effective locations even though demand increases.

San Diego Bulk Sub-area Load Shape and Estimated Energy Storage Charging Capability

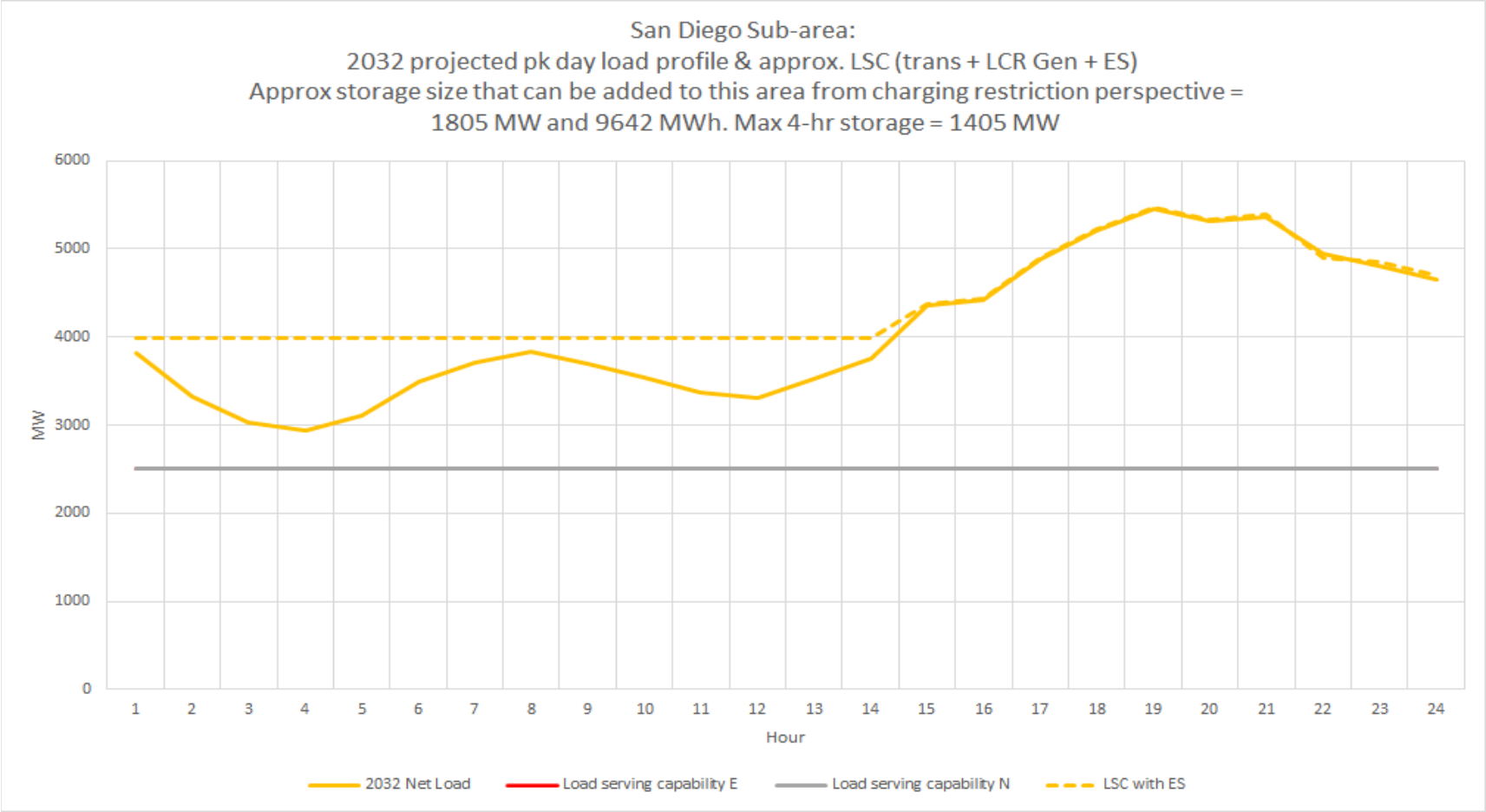

Overall San Diego – Imperial Valley Area LCR

Year	Category	Limiting Facility	Contingency	LCR (MW)
2027	P6	Same constraint as in the San Diego bulk subarea	Same contingency as in the San Diego subarea	3369
2032	P3	Yucca-Pilot Knob 161 kV line, Yucca 161/69 kV transformers	G-1 of TDM generation, system readjustment, followed by Imperial Valley-North Gila 500 kV line (N-1)	4849

Reasons for the changes in the LCR needs:

- The LCR need increases due to higher demand forecast for 2032

Overall San Diego-Imperial Valley Area Load Shape and Estimated Energy Storage Charging Capability

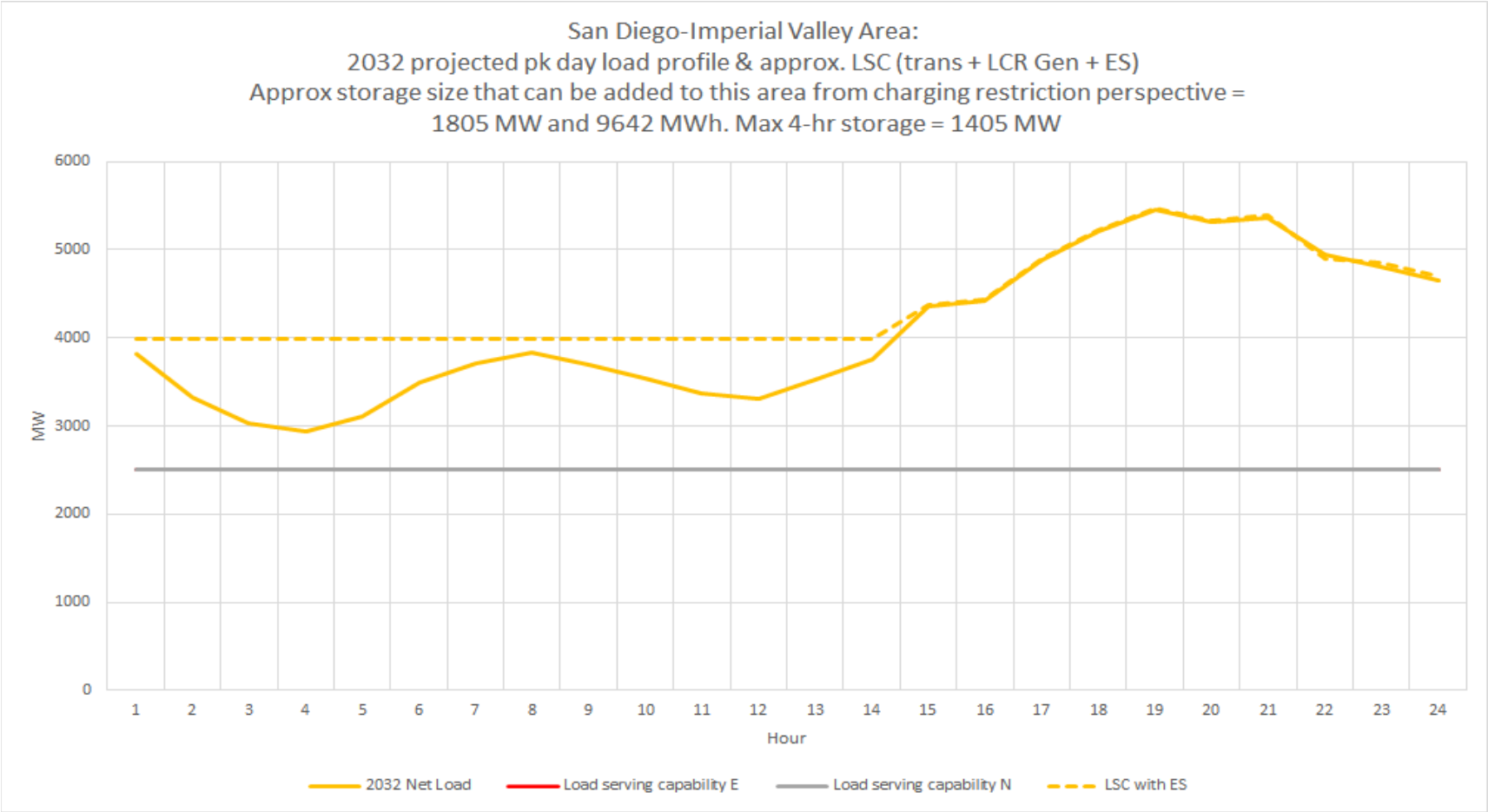

2032 Draft Long-Term LCR Study Results San Diego Non-Bulk Sub-Areas

Rene Romo de Santos

Senior Engineer, Regional Transmission – South

2022-2023 Transmission Planning Process Stakeholder Meeting

November 17, 2022

Major Network Upgrades Modeled in 2032

Project Name	In-service Date
Reconductor TL692: Japanese Mesa - Las Pulgas	Oct-21
TL644, South Bay - Sweetwater: Reconductor	May-22
TL674A Loop-in (Del Mar - North City West) & Removal of TL666D (Del Mar - Del Mar Tap)	Dec-22
2nd Escondido - San Marcos 69 kV T/L	Dec-22
Artesian 230 kV Sub & loop-in TL23051	Dec-22
IID S-Line Upgrade	2023
Rose Canyon - La Jolla 69 kV T/L	Oct-23
Southern Orange County Reliability Upgrade Project – Alternative 3 (Rebuild Capistrano Substation, construct a new SONGS - Capistrano 230 kV line and a new 230 kV tap line to Capistrano)	May-24
TL623C Reconductor (San Ysidro - Otay Tap)	Aug-24
TL649D Reconductor (San Ysidro - Otay Lakes Tap)	Aug-24
Reconductor TL 605 Silvergate - Urban	Dec-24
TL695B Japanese Mesa - Talega Tap Reconductor	Oct-25
TL632 Granite Loop-In and TL6914 Reconfiguration	May-26
TL690E, Stuart Tap - Las Pulgas 69 kV Reconductor	Nov-26
Sweetwater Reliability Enhancement	Dec-27

Border Sub-area: Load and Resources

Load (MW)	2032	Generation (MW)	2032
Gross Load	190	Market/ Net Seller/ Battery	145
AAEE	-4	Solar	0
Behind the meter DG	0	Wind	0
Net Load	**186**	Muni	0
Transmission Losses	1	QF	0
Pumps	0	Future preferred resource and energy storage	0
Load + Losses + Pumps	**187**	**Total Qualifying Capacity**	**145**

Border Sub-area: One-line diagram and LCR Requirement

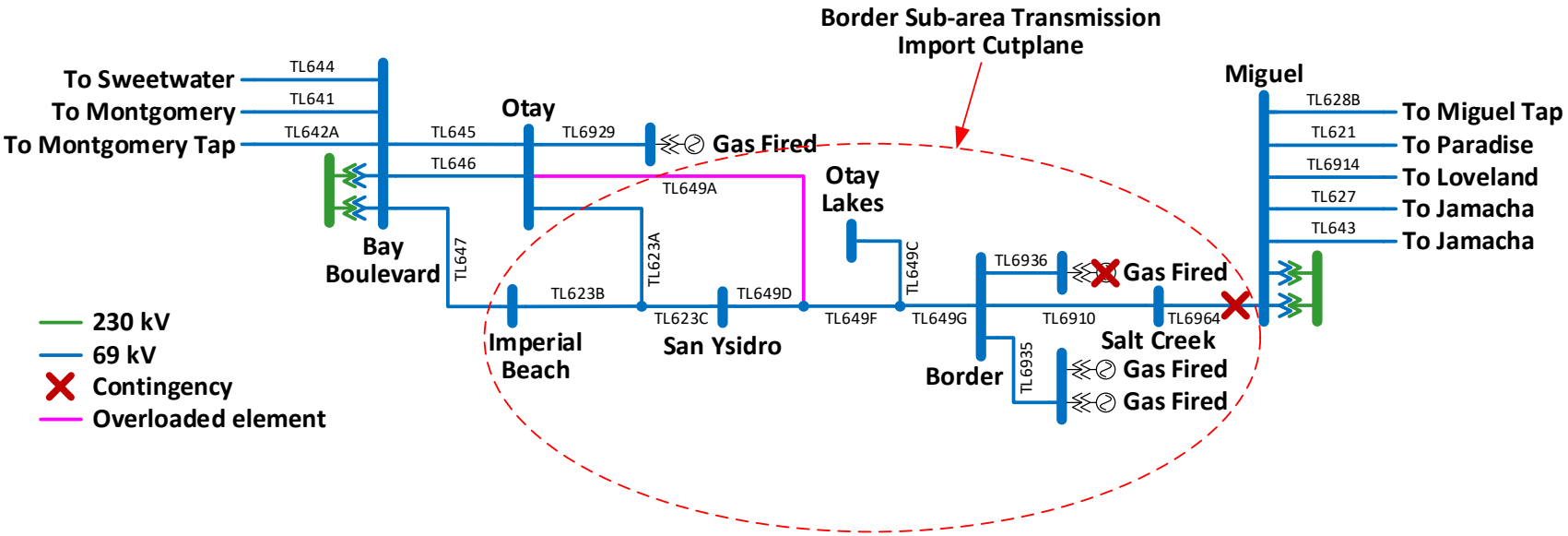

Year	Cat	Limiting Facility	Contingency	LCR (MW)
2032	P3	Otay - Otay Lakes Tap 69 kV (TL649A)	Border unit out of service followed by the outage of Miguel - Salt Creek 69 kV (TL6964)	109

Border Sub-area Load Profiles

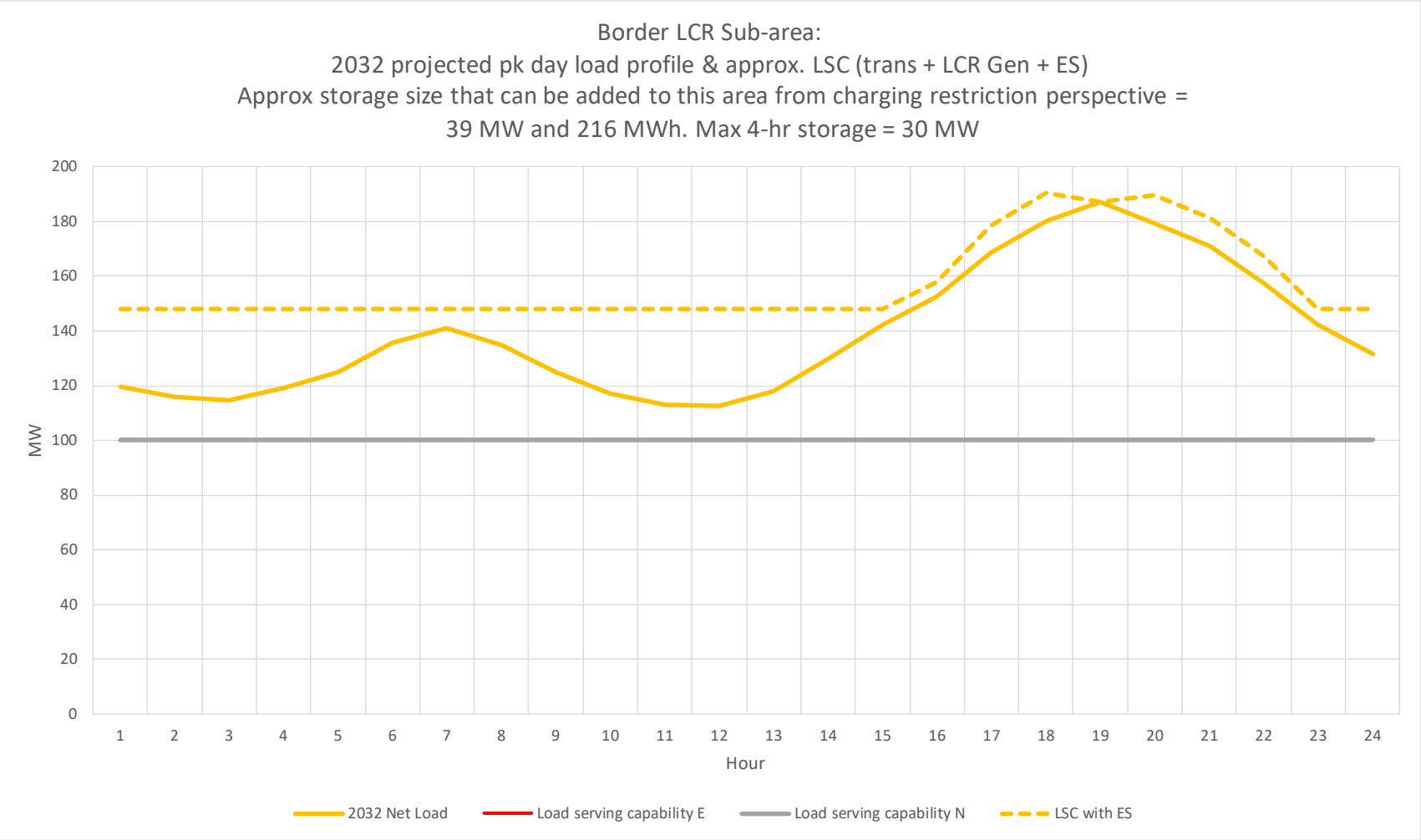

El Cajon Sub-area: One-line diagram and LCR Requirement

Current

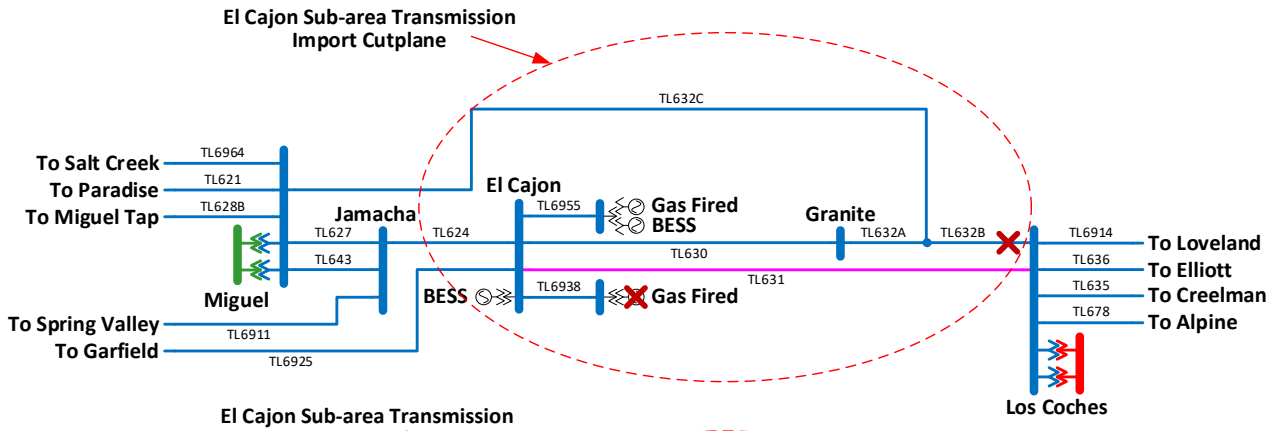

2032

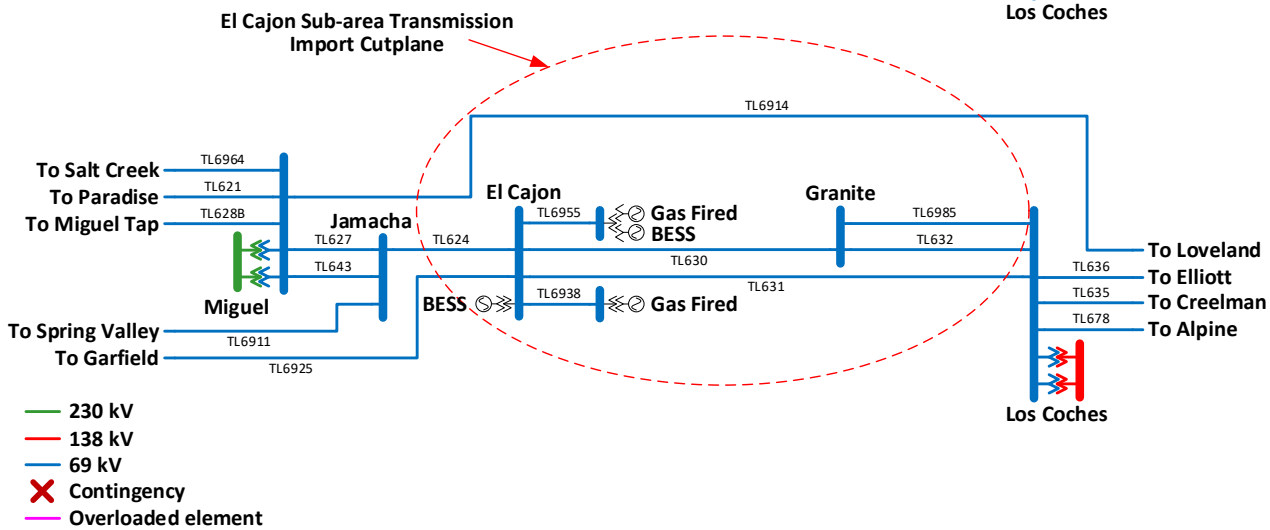

There is no LCR requirement in 2032 since project "TL632 Granite Loop-In and TL6914 Reconfiguration" will be in service in May 2026.

Changes Compared to Previous LCR Requirements

Sub-Area	2027 LCR (MW)	2032 LCR (MW)	Major Reason for LCR Change
Border	80	109	Load forecast increase
El Cajon	106 (5)	0	TL632 Granite Loop-In and TL6914 Reconfiguration Project

California ISO

2022-2023 Transmission Planning Process Special Study – Reduced Reliance on Aliso Canyon Gas Storage

David Le,
Senior Advisor, Regional Transmission – South

2022-2023 Transmission Planning Process Stakeholder Meeting
November 17, 2022

2022-2023 Transmission Planning Process Special Studies

- The CAISO is conducting two special studies:
  - High Electrification Sensitivity Scenario
    - The preliminary reliability results were presented at the September TPP meeting stakeholder call
    - The preliminary policy and economic results have been presented earlier in the stakeholder call
  - Reduced Reliance on Aliso Canyon Gas Storage
    - The preliminary results for this study are presented here

Reduced Reliance on Aliso Canyon Gas Storage Special Study

1. **Study Objective:**
   - The CAISO performs the local reliability assessment for the LA Basin and San Diego-Imperial Valley areas in the absence of Aliso Canyon gas storage to complement the CPUC Order Instituting Investigation (I.17-02-002) proceeding.

2. **Study Scopes:**
   - Perform reliability assessments for the LA Basin and San Diego-Imperial Valley local capacity requirement areas with the gas-fired generation curtailment due to absence of the Aliso Canyon gas storage facility
   - Identify reliability concerns and evaluate potential transmission upgrade options

LA Basin and San Diego-Imperial Valley Areas

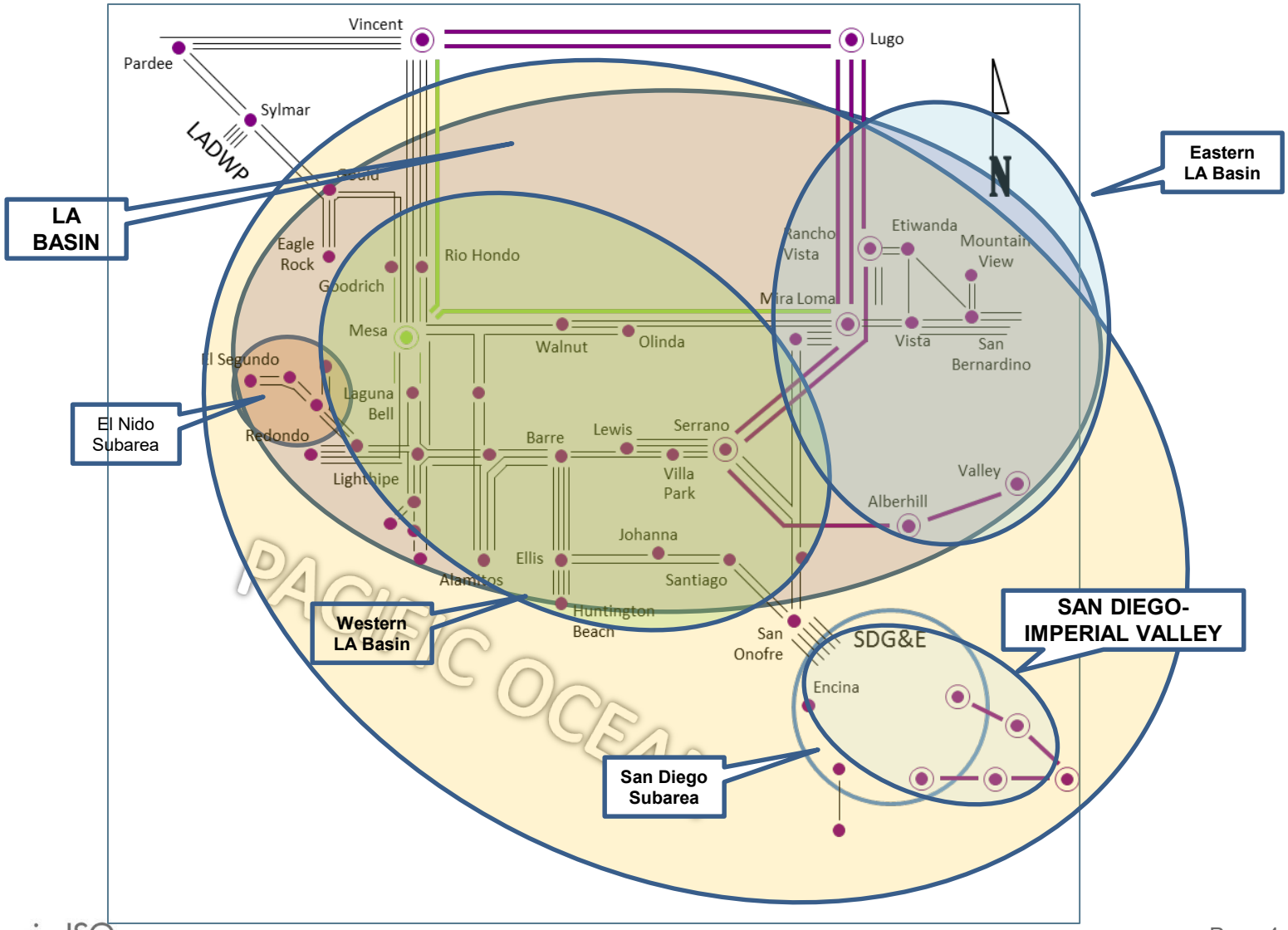

Power Flow Assessment for the LA Basin and San Diego-Imperial Valley LCR Areas with Gas Generation Curtailment due to Absence of Aliso Canyon Gas Storage

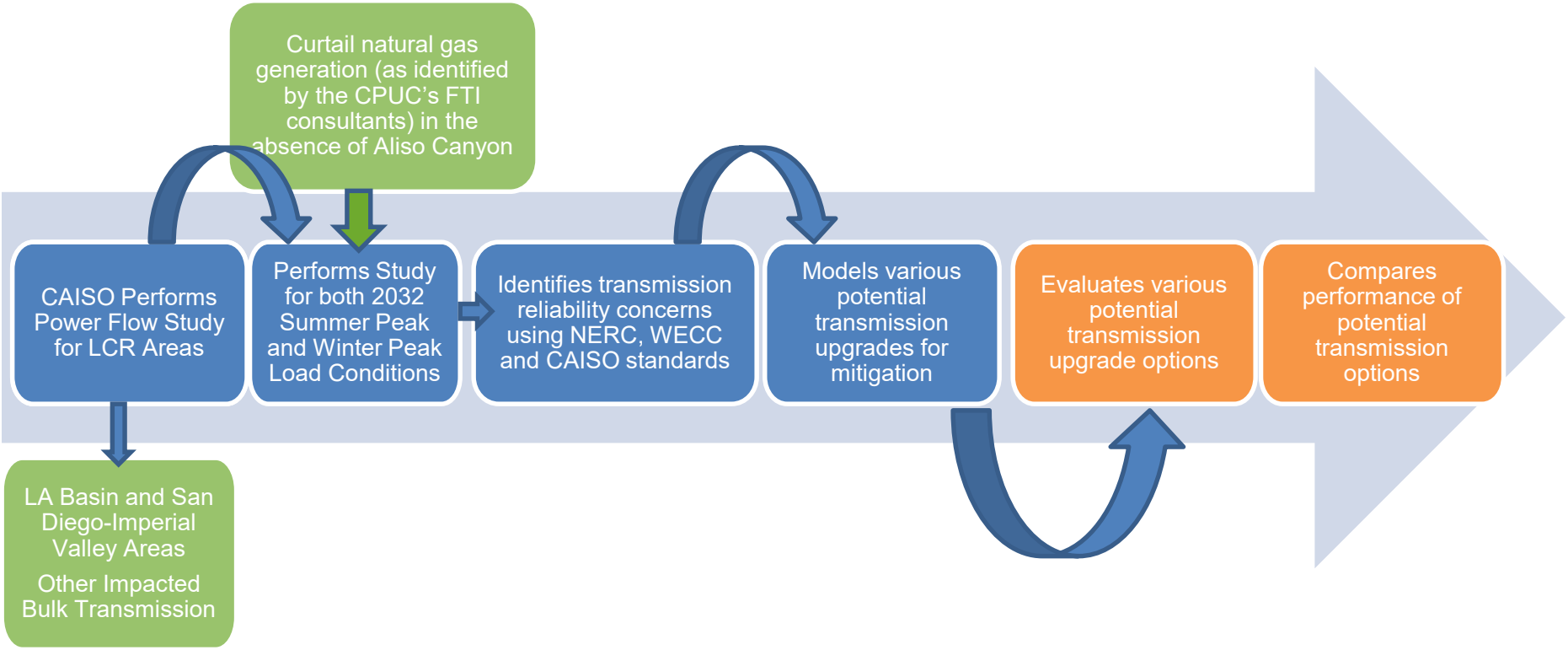

LCR Area: Local Capacity Requirement Area

Summary of power flow base cases for the study

	Power Flow Cases	Study Case Descriptions
1	2032 Summer peak	Models 1-in-10 AAEE 2 & AAFS 4 demand with Additional Transportation Electrification (ATE) forecasts
2	2032 Winter peak	67% of the Summer peak load condition

Sources for gas-fired generation curtailment in the absence of Aliso Canyon gas storage

- The list of gas-fired generation to be curtailed is obtained from FTI Consulting (CPUC's consultant) study that is part of the CPUC Aliso Canyon OII Phase 3 (I.17-02-002)
  - FTI Final Report Supporting Materials*
    - Summary Gas Demand Table with Curtailments – Final Shortfall Models – Prepared for the CPUC.xlsx
    - Look for generation that has a zero value in the "Supported per Hydraulic Models", but non-zero value in the "Requirements per PLEXOS Model"

*https://www.cpuc.ca.gov/-/media/cpuc-website/divisions/energy-division/documents/natural-gas/aliso-canyon/fti-phase-3-final-report-supporting-materials.zip

Gas-fired generation curtailment in the study

PTO Area	Number of Generation Facilities	Total Curtailment (MW)
SCE	41	3,083
SDG&E	15	645
Total	56	3,728

- FTI Consulting's findings indicate that approximately 56 generating facilities would be required to be curtailed in the absence of the Aliso Canyon gas storage.
- The estimated total curtailment is about 3,700 MW for generating facilities in the SCE and SDG&E service areas.

Summary of Reliability Study Results

- Extensive thermal overloading concerns under critical contingencies in the LA Basin and San Diego areas under summer peak load conditions
- Several IID transmission facilities are also impacted due to contingencies in the San Diego-Imperial Valley area
- 2032 Winter peak load conditions did not result in transmission reliability concerns in the LA Basin and San Diego-Imperial Valley area, provided that the remaining gas-fired generation resources are available
  - As transportation and building fuel substitution become more electrified in the future, the winter peak load is also increasing (winter peak load for 2035 increases 6% over the 2032 winter peak load (73% of summer peak vs. 67% summer peak))

Summary of Reliability Study Results – Summer 2032

	Impacted Facilities	Contingencies	Area	Identified Reliability Concerns	Notes
1	Chino-Mira Loma 230kV line	P6 - Mira Loma AA Banks 500/230kV #1, then #2 bank	East LA Basin	Thermal overload	
2	Ellis-Johanna 230kV line	P6 - Ellis-Santiago 230kV, then Imperial Valley-N.Gila 500kV line	West LA Basin	Thermal overload	P6 involves one SCE-owned facility and one SDG&E-owned facility
3	Ellis-Santiago 230kV line	P6 – Ellis-Johanna 230kV, then Imperial Valley-N.Gila 500kV line	West LA Basin	Thermal overload	See above notes
4	Johanna-Santiago 230kV line	P6 – Ellis-Santiago 230kV, then Imperial Valley-N.Gila 500kV line	West LA Basin	Thermal overload	See above notes
5	La Fresa-Hinson 230kV line	P6 – La Fresa-Laguna Bell 230kV, then Mesa-Redondo 230kV line	West LA Basin	Thermal overload	
6	Laguna Bell-Mesa 230kV line	P6 – Lighthipe-Mesa 230kV, then Mesa-Redondo 230kV line	West LA Basin	Thermal overload	
7	Lighthipe-Mesa 230kV line	P6 – La Fresa-Laguna Bell 230kV, then Mesa-Redondo 230kV line	West LA Basin	Thermal overload	
8	Mesa-Redondo 230kV line	P6 – La Fresa-Laguna Bell 230kV, then Lighthipe-Mesa 230kV line	West LA Basin	Thermal overload	
9	Del Amo – Hinson 230kV line	P6 – La Fresa-Laguna Bell 230kV, then Lighthipe-Mesa 230kV line	West LA Basin	Thermal overload	

Summary of Reliability Study Results – Summer 2032

	Impacted Facilities	Contingencies	Area	Identified Reliability Concerns	Notes
11	Midway-Whirlwind 500kV segment 32 line	P6 – Midway-Vincent 500kV #1, then Midway-Vincent 500kV #2	North of LA Basin	Thermal overload	Current RAS needs to be checked for adequacy and applicability for future 10-year horizon
12	Midway-Whirlwind 500kV segment 31 - 32	P6 – Midway-Vincent 500kV #1, then Midway-Vincent 500kV #2	North of LA Basin	Thermal overload	See above notes
13	Devers – Red Bluff 500kV #1 500kV line	P6 – Devers – Red Bluff #2 500kV line, then IV – N.Gila 500kV line	East of LA Basin	Thermal overload	
14	Julian Hinds – Mirage 230kV line	P6 – Devers – Red Bluff #1 500kV, then Devers-Red Bluff #2 line	East of LA Basin	Thermal overload	Existing Blythe generation RAS tripping is adequate
15	Mira Loma AA Bank 500/230kV #1	P6 – Chino-Mira Loma #3 230kV line, then Mira Loma AA Bk #2	East LA Basin	Thermal overload	
16	Serrano AA Bank 500/230kV #2	P6 – Serrano AA Bank #1, then Serrano AA Bank #3	West LA Basin	Thermal overload	
17	Mesa AA Bank 500/230kV #3	P6 – Laguna-Mesa 230kV line, then Mesa AA Bank #4	West LA Basin	Thermal overload	

California ISO

Summary of Reliability Study Results – Summer 2032

	Impacted Facilities	Contingencies	Area	Identified Reliability Concerns	Notes
18	Otay Mesa-Tijuana 230kV line	P6 - Ocotillo-Suncrest 500kV, then ECO-Miguel 500kV line	SDG&E	Thermal overload	
19	Sycamore-Suncrest 230kV line #1	P6 - ECO-Miguel 500kV, then Sycamore-Suncrest line #2	SDG&E	Thermal overload	
20	Imperial Valley 230kV Phase Shifting Transformer	P6 - Ocotillo-Suncrest 500kV, then ECO-Miguel 500kV line	SDG&E	Thermal overload	
21	Miguel 500/230kV transformer #1	P6 - Ocotillo-Suncrest 500kV, then Miguel 500/230kV transformer #2	SDG&E	Thermal overload	
22	Suncrest 500/230kV transformer #2	P6 - ECO-Miguel 500kV, then Suncrest 500/230kV transformer #1	SDG&E	Thermal overload	
23	Pilot Knob-El Centro 161kV line	P3 - G-1 TDM, then Imperial Valley-N.Gila 500kV line	IID	Thermal overload	Impacted IID facility
24	Pilot Knob-Yucca 161kV line	P3 - G-1 TDM, then Imperial Valley-N.Gila 500kV line	IID	Thermal overload	See above notes
25	Yucca 161/69kV transformer	P3 - G-1 TDM, then Imperial Valley-N.Gila 500kV line	IID	Thermal overload	See above notes

Transmission Mitigation Alternatives

Options	Description of Alternatives	Areas
1A	❖ Diablo South Multi-Terminal HVDC VSC Line (2000 MW at Diablo Canyon, 1000 MW at Alamitos and 1000 MW at Huntington Beach ❖ Additional upgrades in LA Basin (La Fresa-Hinson 230kV, South of Ellis 230kV lines) ❖ Imperial Valley-N.Gila #2 500kV line, Sycamore-Suncrest 230kV #3 line, Suncrest 500/230kV #3 transformer, Miguel 500/230kV #3 transformer	Western LA Basin & San Diego
1B	❖ Diablo South Multi-Terminal HVDC VSC Line (same as in Option 1A) ❖ Imperial Valley – N.Gila 500kV #2 line ❖ Alberhill – Suncrest 500kV HVDC VSC line (1000 MW)	Western and Eastern LA Basin, San Diego
2A	❖ Diablo South Multi-Terminal HVDC VSC Line (2000 MW at Diablo Canyon, 1000 MW at Redondo Beach, 1000 MW at Encina)	Western LA Basin and San Diego
2B	❖ Diablo South (same as Option 2A) ❖ Third Sycamore-Suncrest 230kV line ❖ Fourth Serrano AA 500/230kV transformer	Western LA Basin and San Diego
2C	❖ Diablo South (same as Option 2A) ❖ Alberhill-Suncrest HVDC VSC Line (1000 MW)	Western LA Basin and San Diego
3	❖ Diablo South (2000 MW at Diablo Canyon, 500 MW at Redondo Beach, 750 MW at Alamitos, 750 MW at San Onofre)	Western LA Basin and San Diego

Transmission Mitigation Alternatives

Options	Description of Alternatives	Areas
4	❖ Vincent-Del Amo HVDC VSC line (1000 MW)	Western LA Basin
5	❖ Imperial Valley – Serrano HVDC VSC line (2000 MW)	San Diego, Western LA Basin
6	❖ Devers – La Fresa HVDC VSC line (1000 MW)	Eastern and Western LA Basin
7A	❖ Imperial Valley-Del Amo HVDC VSC line (2000 MW) ❖ Imperial Valley-N.Gila #2 500kV line	San Diego Western LA Basin
7B	❖ Option 7A, plus the following upgrades: ❖ Additional upgrades in the LA Basin (La Fresa-Hinson 230kV line, Lighthipe-Mesa 230kV line, Mesa-Redondo 230kV, Midway-Whirlwind (check for applicability and adequacy of Path 26 RAS) ❖ Serrano AA 500kV Bank #4 ❖ Additional Suncrest and Miguel 500/230kV transformer banks ❖ Additional dynamic reactive support in San Diego	Western LA Basin San Diego
8A	❖ Multi-terminal HVDC VSC (Imperial Valley (2000 MW)-Inland (normal flow at 1000 MW with converter capability up to 2000 MW for emergency condition)-Del Amo (1000 MW normal flow with converter capability up to 2000 MW for emergency condition)), plus the following upgrades: ❖ Del Amo-Mesa 500kV line (new) ❖ Del Amo-Serrano 500kV line (new) ❖ Del Amo new 500kV substation with 3 new AA-banks	Western LA Basin San Diego

Transmission Mitigation Alternatives

Options	Description of Alternatives	Areas
8B	❖ Multi-terminal HVDC VSC (Imperial Valley (2000 MW) – Sycamore Canyon (1000 MW normal flow with converter capability up to 2000 MW for emergency condition) - Del Amo (1000 MW normal flow with converter capability up to 2000 MW for emergency condition)), plus the following upgrades: ❖ Del Amo-Mesa 500kV line (new) ❖ Del Amo-Serrano 500kV line (new) ❖ Del Amo new 500kV substation with 3 new AA-banks	Western LA Basin San Diego

Summary of Transmission Alternative Assessments

Options	Alternative Descriptions	Summary of Performance Analysis	Effectiveness/Notes
1A	Diablo South HVDC VSC (Diablo, Alamitos, HB) and upgrades in SCE and SDG&E area, IV-NG #2 500kV line	❖ This option is effective for both LA Basin and San Diego areas	High / Also provides relief for Path 26 line flow under contingency condition
1B	Diablo South HVDC VSC (see above), IV-NG #2 500kV, Alberhill-Suncrest HVDC VSC	❖ This option is not effective for the San Diego area	Not effective
2A	Diablo South HVDC VSC (Diablo, Redondo, Encina)	❖ This option is not effective for both the LA Basin and San Diego areas	Not effective
2B	Option 2A, plus Sycamore-Suncrest 230kV #3 and fourth Serrano AA Bank	❖ This option is effective for both LA Basin and San Diego areas	High / Also provides relief for Path 26
2C	Option 2A, plus Alberhill-Suncrest HVDC VSC line	❖ This option is effective for both LA Basin and San Diego areas	High / Also provides relief for Path 26
3	Diablo South HVDC VSC (Diablo, Redondo, Alamitos, San Onofre)	❖ This option is not effective for both LA Basin and San Diego areas: (a) does not mitigate Serrano AA bank loading issue; (b) does not mitigate various loading constraints in San Diego area	Not effective
4	Vincent-Del Amo HVDC VSC line	❖ This option is not effective for both LA Basin and San Diego areas: identified reliability concerns still remain	Not effective
5	Imperial Valley-Serrano 500kV line HVDC VSC	❖ This option is not effective for both LA Basin and San Diego areas: identified reliability concerns still remain	Not effective

Summary of Transmission Alternative Assessments

Options		Summary of Performance Analysis	Effectiveness
6	Devers-La Fresa HVDC VSC line	❖ This option is not effective for both LA Basin and San Diego areas: identified reliability concerns still remain	Not effective
7A	IV-Del Amo HVDC VSC, IV-N.Gila #2 500kV line	❖ This option is not effective for both LA Basin and San Diego areas: identified reliability concerns still remain	Not effective
7B	Option 7A, plus various 230kV upgrades in LA Basin, additional AA banks in LA Basin and San Diego	❖ This option is effective for both LA Basin and San Diego areas	High / Also provides policy-driven benefits
8A	Imperial Valley-Inland-Del Amo HVDC VSC line, plus new 500kV lines and substation in the LA Basin	❖ This option still has some reliability concerns for both SCE and San Diego areas: (a) 230kV line overload in the LA Basin that will need operating procedure for operating the Imperial Valley-Inland-Del Amo multi-terminal DC line to mitigate line overload in the Western LA Basin; (b) line loading concern on the Path 26 lines in SCE area; and (c) voltage collapse condition occurs for the P6 of Eco-Miguel 500kV line, followed by Ocotillo-Suncrest 500kV line (this condition needs operating procedure to operate the DC line under contingency condition)	Partially effective; will need operating procedure to operate the DC line under contingency condition; will require feasibility assessment for Path 26 RAS for future
8B	Imperial Valley-Sycamore-Del Amo HVDC VSC line, plus new 500kV lines and substation in LA Basin	❖ This option is effective for both LA Basin and San Diego areas	High / Also provides policy-driven benefits

Conclusions

- Alternatives 1A, 2B and 2C are effective at mitigating reliability concerns in the LA Basin and San Diego-Imperial Valley areas
  - These alternatives include a multi-terminal HVDC VSC line south of Diablo Canyon to the LA Basin and San Diego areas. The studies include power flow analysis only. The CAISO is in the process of assessing applicable dynamic models that will be required for dynamic stability analysis.
  - These alternatives take advantage of locating the terminal HVDC VSC lines where once-through cool gas generation retires
  - These alternatives also provide loading relief to Path 26 line flow under contingency conditions
  - These alternatives include variation of terminals to be connected to the LA Basin and San Diego areas
  - Depending on where these terminals are connected to, other transmission upgrades may be required to provide further mitigations

Conclusions (cont'd)

- Alternatives 7B and 8B are also effective at mitigating reliability concerns in the LA Basin and San Diego-Imperial Valley areas
  - These alternatives do not provide relief to line flow loading on Path 26 under contingency condition as the alternatives 1A, 2B and 2C. However, these alternatives provide policy-driven benefits of accessing renewable resources via Imperial Valley Substation.
  - Both of these alternatives include 500kV bulk transmission projects in the LA Basin and San Diego-Imperial Valley areas
  - Alternative 8B provides better performance in mitigating voltage stability concern due to loss of two major 500kV transmission lines in San Diego areas when compared to Alternative 7B

Reduced Reliance on Aliso Canyon Gas Storage Special Study Schedule

	Actions	Target Completion Date
1	Outreach to the CPUC to obtain relevant information related to specific generation facilities that were curtailed in the FTI Consulting's Order Instituting Investigation (OII) Phase 3 Study	4/1/2022 (Completed)
2	Present study scope to the stakeholders	7/6/2022 (Completed)
3	Perform study for the 2032 study cases	11/1/2022 (Completed)
4	Evaluate potential transmission options for 2032 study cases	11/14/2022 (Completed)
5	Present study findings to the stakeholders	11/17/2022
6	Complete documenting study results in the draft Transmission Plan	December 2022 – March 2023

California ISO

Wrap-up
Reliability Assessment and Study Updates

Kaitlin McGee
Sr. Stakeholder Engagement and Policy Specialist

2022-2023 Transmission Planning Process Stakeholder Meeting
November 17, 2022

Comments

- Comments due by end of day December 5, 2022
- Submit comments through the ISO's commenting tool, using the template provided on the process webpage:
- https://stakeholdercenter.caiso.com/RecurringStakeholderProcesses/2022-2023-Transmission-planning-process